The 21st Century Substation Design

Final Project Report

Power Systems Engineering Research Center

Empowering Minds to Engineer
the Future Electric Energy System

The 21st Century Substation Design

Final Project Report

Project Team

Mladen Kezunovic, Principal Investigator
Mohsen Ghavami
Chenyan Guo
Yufan Guan
Texas A & M University

George Karady, Co-Principal Investigator
Linh Dam
Arizona State University

PSERC Publication 10-15

September 2010

Information about this project

For information about this project contact:

Mladen Kezunovic, Ph.D., P.E.
Texas A&M University
Department of Electrical and Computer Engineering
College Station, TX 77843-3128
Tel: 979-845-7509
Fax: 979-845-9887
Email: kezunov@ece.tamu.edu

Power Systems Engineering Research Center

The Power Systems Engineering Research Center (PSERC) is a multi-university Center conducting research on challenges facing the electric power industry and educating the next generation of power engineers. More information about PSERC can be found at the Center's website: http://www.pserc.org.

For additional information, contact:

Power Systems Engineering Research Center
Arizona State University
577 Engineering Research Center
Tempe, Arizona 85287-5706
Phone: 480-965-1643
Fax: 480-965-0745

Notice Concerning Copyright Material

PSERC members are given permission to copy without fee all or part of this publication for internal use if appropriate attribution is given to this document as the source material. This report is available for downloading from the PSERC website.

© 2010 Texas A&M University. All rights reserved.

Acknowledgements

This is the final report for the Power Systems Engineering Research Center (PSERC) research project titled "The 21st Century Substation Design." We express our appreciation for the support provided by PSERC's industrial members.

The project industry advisors with affiliations at the time of the project approval were:

National Grid (D. Angell, T. Gentile), Arizona Public Service (A. Bajarang), TVA (L. Beard), AEP (N. Bhatt), Duke Energy (Y. Boutwell), PG&E (S. Chiang), NYPA (B. Fardanesh), AREVA (J.Giri), ITC Holdings (A. Gupta), BCTC (J.H. Gurney), ABB (K. Kutlev), Tri State (A. Mander), EPRI (P. Myrda), G.E.(M. Reichard).

Executive Summary

Many of the US substations are now more than thirty to fifty years old and may be in need of upgrade or replacement soon. The US National Institute of Standards and Technology (NIST) has recently published the smart grid framework release 1.0 document, which was in response to the Energy Independence Security Act (EISA) of 2007 and American Recovery and Reinvestment Act (ARRA) of 2009. A review of these documents indicates a need to develop standards for smart substations of the future.

The future substation design requires an understanding how both primary and secondary equipment may interact in the substation, how measurements from the primary system may be converted to secondary quantities by using multifunctional intelligent electronic devices (IEDs), and how the availability of new types of signal sensors may eliminate many of the drawbacks imposed by conventional instrument transformers.

The purpose of this study is to create a vision of the future substation. To create this vision, various technical, economical and environmental criteria, such as reliability, cost, interoperability, re-configurability, security, controllability and flexibility need to be considered. Those criteria require use of new design methodologies quite different from the existing philosophy. The design strategies are focused on reducing cost while maintaining the performance, or maintaining cost while improving performance.

Based on the considerations mentioned above, three design approaches to meet different scenarios requirements and needs are considered:

- *Retrofit existing substation design*. This approach assumes retrofitting existing substation communication protocol, intelligent electronic devices, power apparatus, and operating standards to improve the overall performance or reduce cost without disrupting the continuity of service. For this purpose, a comprehensive survey of new technologies is done and the cost benefit analysis is addressed. Two scenarios are discussed: upgrading and expanding the existing substation equipment using latest technologies. The emphasis is given to the use of wireless and optical fiber communication media when adding new equipments and using software integration of data when retrofitting existing design.
- *Implement new substation design.* This approach assumes designing the functionality and selecting the specific apparatus and IEDs to meet the demand of 21st century, using off-the-shelf products. In this approach, a new layout of substation equipment that illustrates innovative options for "fusion" between power apparatus and infrastructure for monitoring, control and protection is proposed. This approach requires field implementation that is different from the current practice and assumes availability of newly designed software modules for data acquisition and information extraction. New communication infrastructure to support exchange of information with the control systems and neighboring substations is also envisioned. The use of power flow controllers of various designs is highly recommended.
- *Green field design.* This approach assumes designing future substation that gives best solution to every criteria of the 21st century substation design including the

optimization of the profit and system operation/cost, using completely new techniques, protocols, and apparatus. Two novel technologies High Temperature Superconductor (HTS) and Solid State Transformer (SST) are envisioned. An Intelligent Economic Alarm Processor (IEAP) bringing the electricity market function into the future "Smart substation" is proposed. This creates an opportunity for better correlating the market activity with the physical system states in real time and sharing such information among market participants. Future "intelligent" substations should play an important role in the overall "Smart Grid" and be capable of providing such information.

Several issues are addressed but not explored in our research. Future work may include:

- Requirements of the software retrofit to satisfy the future needs and requirements;
- Cyber security model, detection and test plan for the new substation designs
- Comparison of different data communication bus structure for the new designs.
- Detailed cost-benefit analysis of the future design

Table of Contents

1. Introduction 1
   1.1 Substation role in the power system 1
   1.2 Legacy solutions 1
   1.3 Future requirements 3
   1.4 Goals of this report 3
2. Substation design criteria 5
   2.1 General criteria for substation design 5
   2.2 Criteria for primary equipment 5
   2.3 Criteria for secondary equipment 6
   2.4 Design approach to meet the criteria 6
3. Retrofit design 8
   3.1 Introduction 8
   3.2 Retrofit scenarios 8
   3.3 Primary equipment design 8
   3.4 Dry-type transformer 8
      3.4.1 Flexible AC Transmission Systems (FACTS) 10
      3.4.2 Fiberglass applications in substation 12
      3.4.3 Noise barrier 12
   3.5 Secondary equipment design 13
      3.5.1 Switchyard monitoring devices 14
      3.5.2 Intelligent Electronic Devices (IEDs) 17
      3.5.3 Fiber optic cables 19
      3.5.4 Wireless communication 20
   3.6 Benefits of retrofit design 21
   3.7 Conclusion 22
4. New substation design 24
   4.1 Introduction 24
   4.2 Primary equipment design 25
      4.2.1 Gas Insulated Substation (GIS) design 25
      4.2.2 Disconnecting Circuit Breaker (DCB) design 30
   4.3 Secondary equipment design 35
      4.3.1 Hardware implementation 35
      4.3.2 Software implementation 38
   4.4 Benefits of the new substation design 41
   4.5 Conclusion 42
5. Future substation design 43
   5.1 Introduction 43
   5.2 Primary equipment design 43
      5.2.1 HTS (High Temperature Superconductors) substation 43
      5.2.2 Solid state transformer 45

Table of Contents (continued)

5.3 Secondary equipment design 47
5.3.1 Fiber-optic multiplexed sensors and control networks in the future substation 47
5.3.2 Intelligent Economic Alarm Processor (IEAP) concept and design 49
5.4 Benefits of the future substation design 52
5.5 Conclusion 53
6. Future Research 54
7. Conclusion 55
References 56
Project Publications 60
Appendix A.1: Existing technologies 61
1.1 Gas Insulated switchgear modules 61
1.2 Withdrawable circuit breaker 62
1.3 Combined-disconnecting circuit breaker 63
1.4 Integrated Compact Circuit Breaker 68
1.5 Synchronized Sampling 72
1.6 Optical current and voltage sensors 73
1.7 Communication media 74
1.8 Multifunctional IEDs 74
1.9 Wireless network 75
1.10 Ethernet switch 76
Appendix A.2: Novel research ideas and future technologies 77
2.1 Superconducting technology 77
2.2 Solid State Technology 82
2.3 Advanced Alarm Processor using two-level processing structure 84
2.4 Intelligent Economic Alarm Processor (IEAP) 85

Table of Contents

1. Introduction 1
   1.1 Substation role in the power system 1
   1.2 Legacy solutions 1
   1.3 Future requirements 3
   1.4 Goals of this report 3
2. Substation design criteria 5
   2.1 General criteria for substation design 5
   2.2 Criteria for primary equipment 5
   2.3 Criteria for secondary equipment 6
   2.4 Design approach to meet the criteria 6
3. Retrofit design 8
   3.1 Introduction 8
   3.2 Retrofit scenarios 8
   3.3 Primary equipment design 8
   3.4 Dry-type transformer 8
      3.4.1 Flexible AC Transmission Systems (FACTS) 10
      3.4.2 Fiberglass applications in substation 12
      3.4.3 Noise barrier 12
   3.5 Secondary equipment design 13
      3.5.1 Switchyard monitoring devices 14
      3.5.2 Intelligent Electronic Devices (IEDs) 17
      3.5.3 Fiber optic cables 19
      3.5.4 Wireless communication 20
   3.6 Benefits of retrofit design 21
   3.7 Conclusion 22
4. New substation design 24
   4.1 Introduction 24
   4.2 Primary equipment design 25
      4.2.1 Gas Insulated Substation (GIS) design 25
      4.2.2 Disconnecting Circuit Breaker (DCB) design 30
   4.3 Secondary equipment design 35
      4.3.1 Hardware implementation 35
      4.3.2 Software implementation 38
   4.4 Benefits of the new substation design 41
   4.5 Conclusion 42
5. Future substation design 43
   5.1 Introduction 43
   5.2 Primary equipment design 43
      5.2.1 HTS (High Temperature Superconductors) substation 43
      5.2.2 Solid state transformer 45

Table of Contents (continued)

5.3 Secondary equipment design 47
5.3.1 Fiber-optic multiplexed sensors and control networks in the future substation 47
5.3.2 Intelligent Economic Alarm Processor (IEAP) concept and design 49
5.4 Benefits of the future substation design 52
5.5 Conclusion 53
6. Future Research 54
7. Conclusion 55
References 56
Project Publications 60
Appendix A.1: Existing technologies 61
1.1 Gas Insulated switchgear modules 61
1.2 Withdrawable circuit breaker 62
1.3 Combined-disconnecting circuit breaker 63
1.4 Integrated Compact Circuit Breaker 68
1.5 Synchronized Sampling 72
1.6 Optical current and voltage sensors 73
1.7 Communication media 74
1.8 Multifunctional IEDs 74
1.9 Wireless network 75
1.10 Ethernet switch 76
Appendix A.2: Novel research ideas and future technologies 77
2.1 Superconducting technology 77
2.2 Solid State Technology 82
2.3 Advanced Alarm Processor using two-level processing structure 84
2.4 Intelligent Economic Alarm Processor (IEAP) 85

List of Figures

Figure 1.1 Legacy substations..... 2
Figure 1.2 Control panel wiring..... 3
Figure 2.1 Different criteria for the 21st century substation design..... 5
Figure 2.2 Study approach..... 7
Figure 3.1 Insulation material of cable transformer winding [5]..... 9
Figure 3.2 Insulation systems of conventional transformers and Dry-former [4]..... 9
Figure 3.3 Switchyard monitoring devices..... 15
Figure 3.4 Intelligent Electronic Devices (IEDs)..... 18
Figure 3.5 Fiber-optic..... 19
Figure 3.6 Multiplexing fiber optics together..... 19
Figure 3.7 Wireless communication..... 20
Figure 3.8 Multipoint and Mesh network configuration..... 21
Figure 4.1 One line diagram of double busbar [28]..... 25
Figure 4.2 Layout of double busbar GIS [28]..... 26
Figure 4.3 Overview of an underground GIS substation [29]..... 27
Figure 4.4 GIS and AIS solutions in H-configuration[30]..... 29
Figure 4.5 One line diagram (source: SRP)..... 31
Figure 4.6 Layout of substation (source: SRP)..... 31
Figure 4.7 Substation layout with Disconnecting Circuit Breaker..... 32
Figure 4.8 Comparison of DCB substation and original substation areas..... 32
Figure 4.9 Switchgear arrangement of DCB and conventional, one and a half scheme…33
Figure 4.10 Switchgear arrangement of DCB, double busbar scheme..... 33
Figure 4.11 Hardware implementation architecture..... 36
Figure 4.12 Function of security access control device..... 37
Figure 4.13 Software implementation architecture..... 38
Figure 4.14 Substation level data integration..... 39
Figure 4.15 CBMA function diagram..... 40
Figure 4.16 DPRA function diagram..... 40
Figure 4.17 DFRA function diagram..... 41

List of Figures (continued)

Figure 5.1 Superconducting substation.....….. 44
Figure 5.2 Superconducting substation.....….. 46
Figure 5.3 Simplified conventional transformer substations (left) and Solid state transformer substation (right) [45].....….. 46
Figure 5.4 Multiplexing arrangements for FFPI sensors.....….. 48
Figure 5.5 Grid and market operating states.....….. 50
Figure 5.6 Intelligent Economic Alarm Processor Architecture..... 51
Figure A1.1 Type 8ND8 of Siemens, 145kV, three-phase, double bus-bar bay [[50] 61
Figure A1.2 Termination modules [50].....…..... 62
Figure A1.3 Withdrawable circuit breaker [32].....…..... 63
Figure A1.4 Disconnecting circuit breaker with one set of moving contacts/poles[32] .. 64
Figure A1.5 The disconnecting circuit breaker is locked in open position. The sign indicates blocked[32].....…..... 64
Figure A1.6 Operating procedure of DCB – visual indication [32].....…..... 65
Figure A1.7 Failure and maintenance rate of circuit breaker and disconnectors [32] …. 66
Figure A1.8 Substation solutions with DCBs.....…..... 67
Figure A1.9 Space requirement comparison of 145 kV substations (conventional CBs and disconnectors versus DCB) [42]……..... 67
Figure A1.10 Main components of integrated circuit breaker eVM1 of ABB ……...… 69
Figure A1.11 Conventional current transformer (left) and Rogowski coil current sensor (right)[55]……..... 71
Figure A1.12 Control electronics and information management architecture of eVM1 ……...……...……. 72
Figure A1.13 Synchronized sampling implementation……..... 73
Figure A1.14 Optical current and voltage sensors.....…..... 73
Figure A1.15 Optical fiber structure diagram.....…..... 74
Figure A1.16 Multifunctional IEDs……...….....;;..... 75
Figure A1.17 Wireless network implementation [56]……..... 75
Figure A1.18 Ethernet switch ……..... 76

List of Figures (continued)

Figure A2.1 Diagram of a superconducting synchronous condenser [64]..... 80
Figure A2.2 Comparison of V-I characteristics of SuperVar Machine and Conventional Synchronous Machine [65]…….…….. 81
Figure A2.3 Basic configuration of SST [69]…….…….……. 83
Figure A2.4 Single phase module [70]…….……..…….……. 83
Figure A2.5 Different design approaches of SST …….……..……. 83
Figure A2.6 Two-level processing structure..... 85
Figure A2.7 Overview of Intelligent Economic Alarm Processor…..... 86
Figure A2.8 A 14-bus power system model……....…..…….….. 89
Figure A2.9 A FRPN model for L1314 fault based on SCADA data……... 90

List of Tables

Table 3.1 Summary of noise attenuation methods ……. 13

Table 3.2 DGA monitoring methods ……. 16

Table 4.1 Design characteristic of GIS and AIS [30]……. 27

Table 4.2 LCC evaluation of AIS and GIS (based on calculation conducted by a utility) [30]…… 29

Table 4.3 Environment impact comparison of AIS and GIS……. 30

Table 4.4 Comparison between DCB and Conventional CB……. 34

Table 4.5 Cost comparison…….……. 34

Table 5.1 Specifications and cryogenic system cost……..……. 44

Table A2.1 Specification of 15kV HTS FCL [63]……..……..……. 79

Table A2.2 Comparison of conventional and SST [70]……...……. 84

1. Introduction

1.1 Substation role in the power system

An electrical substation is a part of an electricity generation, transmission and distribution system where voltage is transformed from high to low or in reverse using transformers. It also serves as a point of connection between various power system elements such as transmission lines, transformers, generators and loads. To allow for flexibility in connecting the elements, circuit breakers are used as high power switches. Electric power may flow through several substations between generating plant and consumer, and may be changed in voltage in several steps. There are different kinds of substation such as Transmission substation, distribution substation, collector substation, switching substation and some other types of substation. The general functions of a substation may include:

- voltage transformation
- connection point for transmission lines
- switchyard for network configuration
- monitoring point for control center
- protection of power lines and apparatus
- Communication with other substations and regional control center

Making an analogy with the human body, the role of substation in the power system to address the above mentioned issues is pivotal: the substations are the center of the "nervous, immune, musculoskeletal and cardiovascular" subsystems of the entire power system "body". The "nervous" subsystem role of the substation is to allow the central system to sense the operating states, view status of the equipment, and make assessments of the system criticality. The "immune" subsystem role is to develop self-defense means and sustain self healing strategies. The "musculoskeletal" subsystem role is to maintain the system topology, switch the equipment state and restore the power flows. The "cardiovascular" subsystem role is to sustain normal power flow and control the synchronization.

1.2 Legacy solutions

The substation includes the primary equipment (such as circuit breakers, transformers, instrument transformers, etc.) and the secondary equipment (monitoring, control and protection devices) which are installed in control house. The typical design of legacy substation is shown in Fig.1.1.

In the primary side, a large number of breakers and disconnectors are used in order to allow for maintenance and repair with a minimum of interruption, which occupy large space. Oil-insulated transformers are used to step-up or step-down the voltage level for purposes needed. Oil-insulated transformers usually have big size and have potential explosion problems. In addition, the maintenance is also elaborate and the noise of those

transformers is also a big issue. The breakers also need an insulation media which may be oil, gas, or air.

Conventional current and potential transformers (CTs and VTs) are used to convert the primary current and voltage to an operation range (0-5A and 115V) for metering and protection. The CT saturation and open secondary CT circuit safety issue are primarily of concern in such devices.

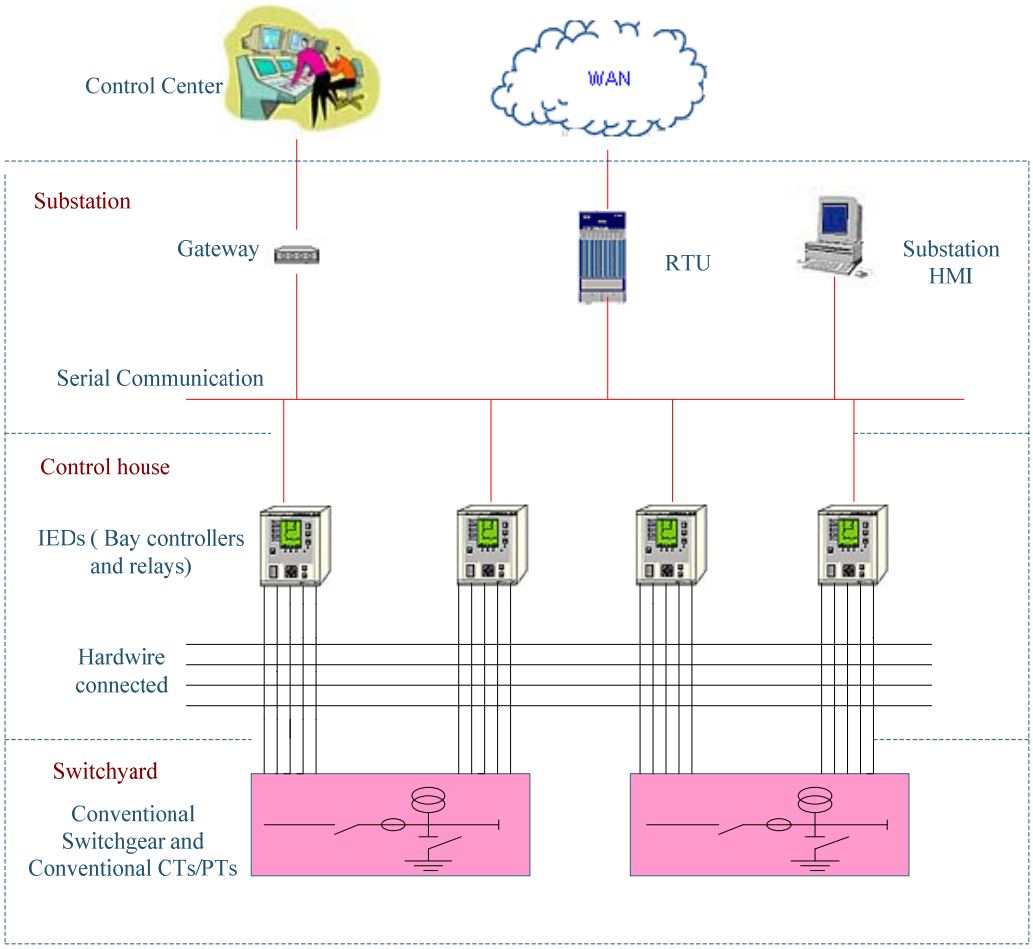

Figure 1.1 Legacy substation

All interfaces between primary and secondary equipment are connected by hard-wired cabling. Different length and types cables are bundled as shown in Fig.1.2, which makes it labor intensive for future maintenance and modification. In addition, due to the large number of wires in a highly electromechanically "polluted" substation switchyard environment, the wiring may experience significant electromagnetic interference (both conducted and radiated).

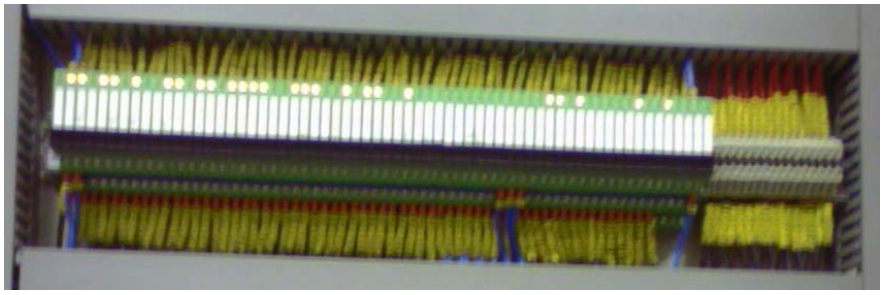

Figure 1.2 Control panel wiring

In the legacy substations, a combination of rigid wiring between devices and low speed serial communications exchange of information among intra-station IEDs is typically used. In order to realize sophisticated inter-IED control schemes, a large number of wiring interconnections between multiple IEDs are required. Besides, low-speed serial communications is often limited to master/slave scheme, so the true peer-to-peer communications between IEDs is not feasible in most legacy substations.

1.3 Future requirements

The US National Institute of Standards and Technology (NIST) have published the smart grid framework release 1.0 document [1]. A review of this document shows several standards for substation applications in both the Transmission and Distribution domain. Future substation designs will be driven by current and new technologies and standards, as well as some new methodologies which are quite different from the existing philosophy. The design requirements will be aimed at either the cost reduction while maintaining the same technical performance or the performance improvement while assuring no or minimal cost increase. Based on the considerations mentioned above, three possible design approaches are studied: a) retrofitting the existing substations with a major replacement of the legacy equipment while maintaining minimal disruption to the continuity of the services, b) deploying brand new substation design using latest of-the-shelf technologies, and c) envisioning green-field substation design which takes energy market participation, profit optimization and system operation risk reduction into combined consideration.

1.4 Goals of this report

The goal of this report is to discuss a more cost-effective, intelligent, higher performance and compact design of the substation. Fast introduction of the new technologies and increasing demand for electricity as well as the concern for environment urge power engineers to seek new technologies and solutions to enhance the flexibility of the grid and improve its capacity and reliability. The introduction of new materials and related power apparatus technologies is expected to result in a new design to meet twenty-first century requirements. High-speed communication as well as data integration and information extraction provide the principles guiding the substation design covering reliable communication infrastructure, fusion between information technology and power apparatus technology and user interfaces. This report also offers new approaches for the substation design which may have totally different philosophy. This design provides

some new features based on anticipated technology development and discovery of fundamentally new design methodologies.

2. Substation design criteria

2.1 General criteria for substation design

For the substation development to reach its technical and economical potentials, the focus has moved now to studying how substations may enable more intelligence in the network, which is labeled the "smart grid" development. It has been concluded that the 21st century substation design should meet the following improved criteria: reliability, security, interoperability, re-configurability, controllability, maintainability, flexibility, reduced cost and environmental impact [2]. An estimate of the importance of the different criteria is shown in Fig. 2.1. The four major criteria commonly emphasized by substation designers are reliability, cost, operational flexibility and environment impact.

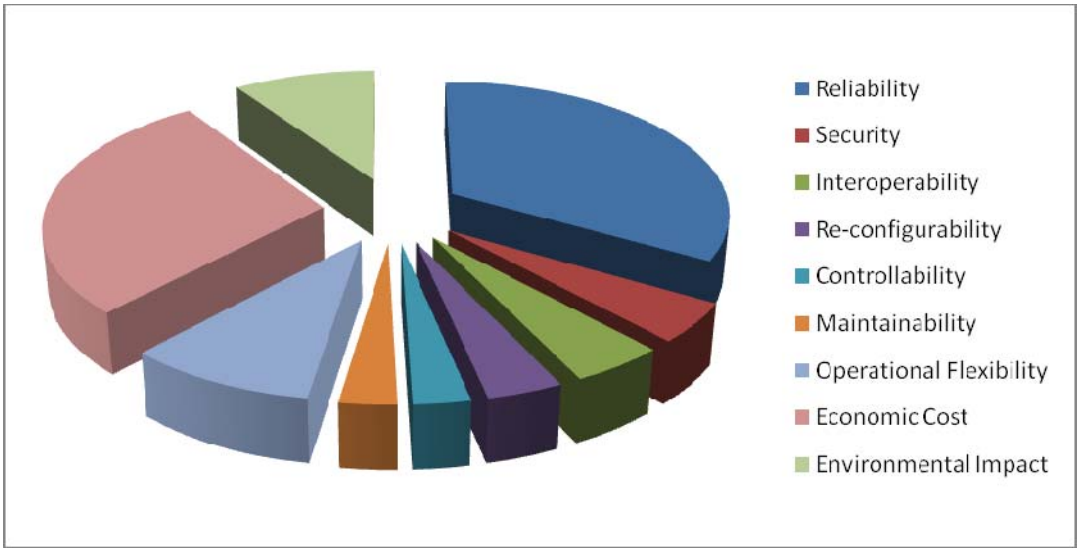

Figure 2.1 Different criteria for the 21st century substation design

2.2 Criteria for primary equipment

The primary equipment chosen to be examined in each design shares common basic criteria such as reliability, flexibility, safety, environmental impact, footprint and cost.

- *Reliability*: controllability of power transfer, high efficiency, improvement in carrying capacity, increased situational awareness, redundancy improvement. .
- *Safety*: limitation of touch and step potential (voltage), risk of fire or explosion, avoidance of unauthorized users or intrusion by continuous surveillance, and seismically qualified equipment.
- *Environmental impact*: site-adapt aesthetic, lowering above-ground level, limitation of electromagnetic and electric field, low level of noise emission, and use of waste recycling.
- *Flexibility*: plug-and-play design, integrated compact design, low level of maintenance and easier operation.

- *Footprint*: as small and compact as possible.
- *Costs*: low cost equipment, minimized life-cycle cost.

2.3 Criteria for secondary equipment

Like primary equipment, the secondary equipment also shares many similar criteria. The secondary equipment design will mainly focus on the following criteria:

- *Reliability*: Secondary equipment should also be more integrated and compact. The secondary functions should have extensive communication, typically done using fiber optics, coaxial cables and wireless means. The protections devices should be available as redundant systems which can work independently of each other.
- *Interoperability*: the implementation of IEDs should allow seamless communication within secondary system, as well as interfacing to network management system. The communication protocols should allow for interoperability between different IEDs that communicate among themselves
- *Controllability*: improved local manual and automatic functions, achieve high speed response in real-time.
- *Re-configurability*: future changes, upgrades and retrofits are simplified and can be done with minimal time and effort (manpower).
- *Economic Benefits*: green-field substation design should take into account energy market participation, profit optimization and system operation risk reduction in a combined consideration.

2.4 Design approach to meet the criteria

Designing the 21st century substation requires look at several scenarios. There are three possible substation design approaches to be taken:

a) Retrofitting the existing substations by replacing legacy equipment with new technologies without disrupting continuity of service;

b) Implementing brand new substation design using off-the-shelf technologies;

c) Envisioning green-field substation design with completely new techniques, protocol, and apparatus, a taking into consideration energy market, profit optimization and system-operation/price.

The Fig. 2.2 shows how the specific design approaches to deal with different criteria and technologies are proposed.

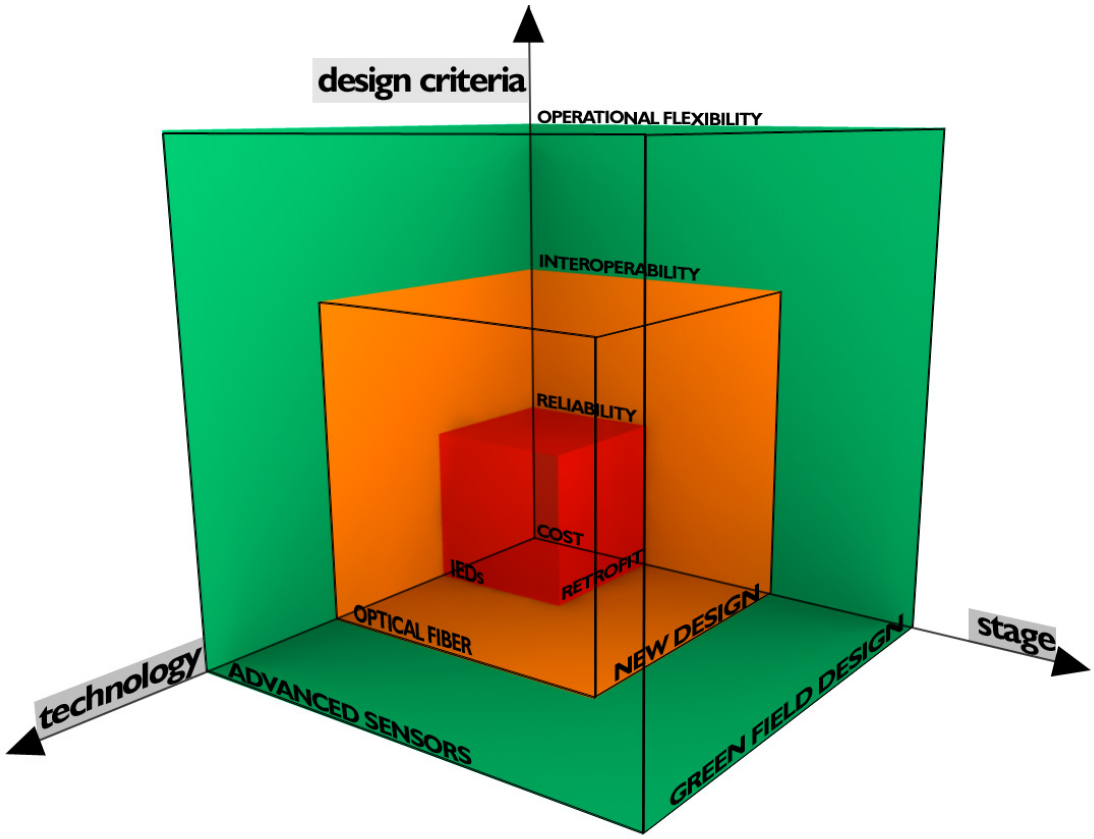

Figure 2.2 Study approach

3. Retrofit design

3.1 Introduction

In this approach, the attempt is to retrofit the existing substations to meet some predefined requirements. In developed countries, most of the substations are installed long time ago. Although there are some maintenance planning and repair strategies that can prolong the life time of old substations, the high cost of operation, maintenance and service with negative impacts on reliability forces the utilities to upgrade their old substations. The main concern of a retrofit is to take into account legacy equipment and the need to have minimal disruption to the continuity of services. To reach these goals, a comprehensive survey of new technologies has to be done and the cost benefit analysis should be addressed.

This chapter is organized as follows. In section 3.2, the different scenarios for retrofit are outlined. The criteria, requirements and reasons for retrofit strategy are discussed. The proposed retrofit strategies for primary and secondary equipment are presented in sections 3.3 and 3.4 respectively. Section 3.5 discusses the benefits of the retrofit design, followed by conclusions in section 3.6.

3.2 Retrofit scenarios

In general, there are two retrofit scenarios for the existing substations:

- Replacing the existing equipments using the new technologies
- Expanding the existing substation using new technologies

3.3 Primary equipment design

This section discusses different options for retrofitting the primary equipment. Various advanced technologies are analyzed and considered as a potential retrofit option in existing substations.

3.4 Dry-type transformer

Transformer is one of the main power apparatus in power system, used for stepping the voltage up and down. The conventional power transformer used in most substations consists of an iron core, and oil/paper-insulated windings. The innovation in insulation system of high-voltage transformer design has resulted in the oil-free type (which can be called dry-type transformer). This new transformer design may be used to replace the conventional to reach performance and environmental benefits. Dry-type transformer is an oil-free high voltage transformer which has been in existence even longer than the oil-type units but mostly at low voltages. This new kind of transformer was developed based on cable technology in ABB's revolutionary new generation of equipment [3]. The first model was completed in December 1997, named 'Dry-former'. The high-voltage cross-link polyethylene power (commonly abbreviated PEX or XLPE) technology is commonly used in underground distribution system, and is now moving to new type of generators and transformers [4]. The use of XLPE increases the field stresses of up to 15kV/mm.

Instead of using rectangular conductors, dry transformers use cylindrical windings (Figure 3.1) [5].

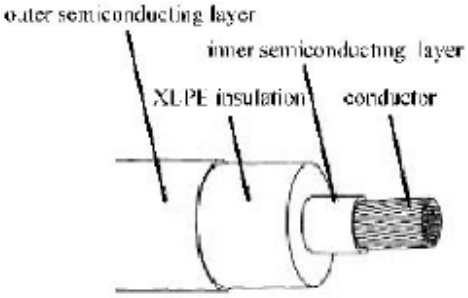

Figure 3.1 Insulation material of cable transformer winding [5]

The conductor is round and homocentric layer with Aluminum (Al) or Copper (Cu) twisted strands which makes internal electric field of cable winding becoming even. The electric current is distributed equally and the eddy current losses can be counteracted thanks to the crossed-linked strain forming equal voltage induction. The inner and outer semi-conducting layers are made up of macromolecule XLPE mixed with charcoal black or imperceptible metal particle which can reduce losses and prevent partial discharge. Insulation structure of Dry-former is shown in Figure 3.2 [3].

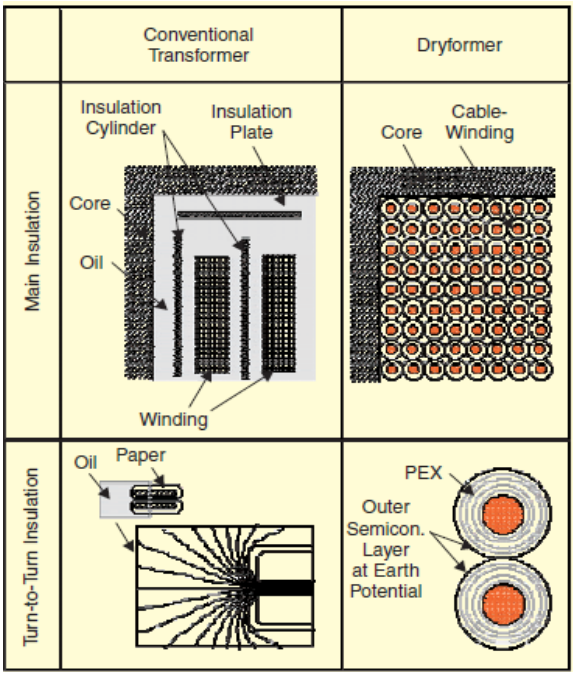

Figure 3.2 Insulation systems of conventional transformers and Dry-former [4]

The Dry-former might be smaller than a conventional one. The new technology allows Dry-former to have a design freedom by which it can be dimensioned to meet the requirements and yet transportation units are much smaller.

Cooling system is an important part in a transformer to solve the temperature rise problem. The dry-type uses two separate fan systems to maintain the normal temperature within the transformer, which is different from the conventional transformer. The advantages of this cooling system is that if something goes wrong with one of the fans, the other can still keep the transformer at normal temperature. The temperature of the cable in windings is measured by the thermal resistance sensor. The frequency governor is supplied for each fan so that the temperature can be adjusted automatically by controlling the running speed of the fan.

The innovations lead to the advantages of dry transformers over conventional ones and substantial benefits for both of the customers and the environments:

- no risk of ground and water pollution
- much smaller risk of fire and explosion
- ability to be installed anywhere (near the lake, river or in densely populated area)
- no risk of partial discharge and corona
- improved reliability
- enhanced personnel safety
- well-suited for densely populated urban areas
- complies with the local environment laws and regulations (reduced CO2 emission), friendly with environment
- cost-saving for substation design: optimized substation design; reductions in required fire-fighting equipment and elimination of the oil pit, minimal maintenance, reduced cabling cost.

The availability of different types of dry-type transformer opens a wide range of selection for different applications: VPI Dry Types, Gas-Filled Dry Types, Epoxy Coated Dry Types, RESIBLOC Epoxy Cast Dry Types, Epoxy Cast Dry Types and Dry-former TM from ABB. At present, Dry-former is designed with primary voltage up to 145kV and power ratings of up to 150 MVA [4]. Dry-formers have been being installed recently at transmission voltage around the world by ABB and other manufacturers such as Siemens, Westinghouse and General Electric [3]. Dry type transformers are also commercially available at distribution voltage level, up to 46 kV now. There is a customized design for windmill, a promising renewable energy resource in the future [3]. The combination of cable technology and transformer technology partly gives rise to the design of high-voltage apparatus with high efficiency, long life and low environmental impact.

3.4.1 Flexible AC Transmission Systems (FACTS)

Flexible AC Transmission Systems (FACTS) is comprised of power electronics-based equipment to enhance stability and power transfer capability of the network.

Base on the connection and operation of components, there are four categories of FACTS Controllers [6]:

- Series controllers: inject voltage in series with the line, only supply or consumes variable reactive power when the voltage is in phase quadrature with the line current, and active power with other phase relationships; such as Static Synchronous Series Compensator (SSSC).
- Shunt controllers: inject current into the system at the point of connection, only supply or consumes variable reactive power when the current is in phase quadrature with the line voltage, and active power with other phase relationships; such as Static Synchronous Compensator (STATCOM) and Static Var Compensator (SVC).
- Combined series-series controllers: are used in a multiline transmission system, provide independent series reactive compensation for each line but also transfer real power among the lines; such as Interline Power Flow Controller (IPFC).
- Combined series-shunt controllers: inject current into the system with the shunt part and voltage in series in the line with the series part. Real power can be exchanged between series and shunt parts via the power link when the two parts are unified; such as Unified Power Flow Controller (UPFC).

With the purpose of controlling current and power flow, the series controller which impacts the voltage and power flow directly is several times more powerful than the shunt one. Shunt controller, on the other hand, is better method for controlling voltage around the connection point through injection of reactive current.

Since the introduction of FACTS devices for over two decades, they have been in use in many substations around the world. Despite the relatively high cost, they offer some very important benefits to the power systems [7]:

- Power flow can be controlled to meet utilities' and power systems' needs
- Loading capability of lines is increased significantly close to their thermal limits.
- System stability and security are increased as they limit fault currents; manage cascading blackout and damp oscillation of the systems.
- Lines' carrying capacity is enhanced since reactive power flow is reduced.

FACTS technology increases power and enhances the capacity of transmission lines by controlling the parameters of the lines. It is not a substitution for mechanical switches but FACTS is used in combination with other controllers to extend the carrying power of a line to reach closer to its limits. The improvement in power semiconductor technology and the decrease of FACTS controllers' cost open up the opportunity of applying FACTS technology at a large-scale. It is foreseen that the FACTS technology will be widely used in the future.

SVC is considered the first generation of FACTS technology. They have been used for over 30 years in substations around the world. STATCOM, the second generation, is commercially available for nearly two decades and has been successfully applied in many critical substations in many countries. The third generation, UPFC, appeared in the market at the end of twentieth century and has limited number of units in operation. The

latter generations have a better performance than the previous one but financial issues prevent the wider market penetration.

Besides technical aspects, the economic aspect must also be considered. The price of STATCOM (80-100$/kVAr) is 2-3 times higher than SVC (25-45$/kVAr) [8]. This is really the main factor that limits the application of STATCOM. All the advantages of STATCOM over SVC cannot compensate this big difference in investment cost. The price of power electronics will be reduced in the near future which could open a wider horizon with much lower price of STATCOM and SVC. It is obvious that the investment cost for advanced FACTS devices is an important factor to consider in a FACTS installation project.

FACTS devices are commercially available in a wide voltage range from 10 kV to 800 kV. Many manufacturers, such as ABB, Siemens, Nokia Capacitors and Areva T&D, have both shunt and series compensation solutions. For older solutions, modern materials and monitoring technique are applied to SVC or capacitor bank for a better performance. For STATCOM and UPFC, which are more expensive, several manufacturers are offering flexible options for the most effective application and to reduce the cost.

3.4.2 Fiberglass applications in substation

The most significant features of fiberglass material are: cost-effective, strong and durable, easy to install, corrosion and rot resistant, safe and long lifetime. For special applications, additional veil should be applied to enhance protection capability (flame retardant, more heat resistant, corrosion and UV protections). The construction is well-suited for outdoor and corrosive environments. Fiberglass materials are a competitive alternative for steel, wood and concrete in construction applications.

Strongwell, a fiberglass manufacturer in the USA, offers several applications of fiberglass to electrical substation such as Utilicover trench cover, Composolite oil containment system, Durashield shelter and SE28 transmission pole. These products help electric utilities to reach environmental compliance and save time and money (at least 10% less than conventional materials) [9].

Fiberglass materials will definitely become an important part in new substations. They are ideal alternatives for steel and wood in auxiliary application for substation equipment. They provide a long-term saving and elimination of cost and inconvenience of downtime for repairs. Fiberglass applications such as oil containment, trench cover, shelter and pole are suitable retrofitting for existing substations.

3.4.3 Noise barrier

Noise is also considered as an environmental impact of substation, especially in densely populated areas. Noise emission in a transmission substation mainly comes from vibrations and operation of transformers. In existing substations, transformers seem to work at its rating for most of the time. Thus noise disturbance cannot be ignored. According to Environmental Protection (Noise) Regulations 1997 of Environmental Protection Authority (EPA), noise emission level in transmission substation cannot exceed the prescribed standard of 5 dB(A). The standard is distinguished in each substation area.

There are several popular methods to reduce noise impact that are summarized in Table 3.1. They can be applied separately or in combination.

Table 3.1 Summary of noise attenuation methods

Noise attenuation method	Description	Disadvantages	Estimated cost ($)
Noise enclosure	✓ Construction of a solid, sealed enclosure around the transformer, avoiding the cooling system and lines. ✓ Highly effective	✓ Expensive ✓ Difficult to access	~ $150,000 per transformer
Wave-trapping barrier	✓ Barriers round four sides of transformer, open at top ✓ Attenuate sound at frequency of interest ✓ Cheaper ✓ Easier for maintenance	✓ Less effective	~ $60,000 – $80,000 per transformer
Noise barriers	✓ Solid walls or barriers (earthen bunds or masonry walls) ✓ Easier to construct around substation ✓ Attenuate some noise levels	✓ Less effective than enclosures directly around the transformer ✓ Taking up more space, not suitable for many sites	~ $25,000 - $70,000 per substation
Purchase land buffer	✓ Purchase of land adjacent to the substation to prevent noise emission from exceeding standard at surrounding area	✓ Depends on the availability of the land and land cost	N/A

The special design composite walls are proved to be very effective and have a lifetime of over 30 years. This type of barrier is an economical choice compared to other structures with all of the following benefits.

- Long life-time, strong and durable
- Inexpensive
- Completely salvable
- Lightweight, easy to install, transport, repair and replace.
- Sound absorbing, non-magnetic, non-conducting, non-corrosive.
- Impervious to rodents, fungus, chemicals or harsh weather.
- Height up to 35 feet.
- Wind load capacities up to 200 mph.

3.5 Secondary equipment design

In this section, we introduce some retrofit options for the substation secondary equipment. The main functionalities of the secondary system of the substation are

categorized into protection, monitoring, communication and backup& emergency control. The retrofit design for substations may vary since the criteria for upgrades may be different. This section describes different strategies for retrofitting the secondary equipment at a large typical substation.

The retrofit strategy is split into four sections:

- Switchyard sensors
- Intelligent Electronic Devices
- Use of fiber optic cables
- Wireless communication

3.5.1 Switchyard monitoring devices

The main functionality of the sensors is to measure signals from primary equipment in the substation yard such as transformers, circuit breakers, power lines, etc. Such sensors are offered by most of the major companies such as Siemens, ABB, GE, SEL, Syprotec and Ningbo Tech. Original copper-wired analog sensors are replaced by optical fiber-based sensors for monitoring and metering. As an example, the most prominent advantages of optical fiber current and voltage sensors are high accuracy, no saturation, reduced size and weight, safe and environmental friendly (avoid oil or SF6), higher performance, wide dynamic range, high bandwidth and low maintenance (Figure 3.3).

A) Temperature sensors

It may be a new functionality for some old substations which still lack this kind of technology. Original copper-wired analog apparatus may be replaced by optical apparatus with fiber-based sensors to measure temperature. Such product, as SIEMENS SIRIUS 3RS1 and 3RS2 for temperature monitoring in solid, liquid or gas media are having compatibility to the original analog apparatus [10]. At the same time, they can integrate many functions in one device. SIRIUS 3RS1 and 3RS2 have temperature monitoring relays monitor heating, air conditioning and ventilation systems just as reliably as motors – and all this with up to 3 sensors simultaneously. Thus, the high-end analysis equipment with digital displays can be used for a broad temperature range and with different types of sensors.

B) Pressure sensors

Some substations still lack this kind of sensors, and existing sensors are mostly analog. They can be replaced by an optical one such as ABB S261 [11].

The S261 are used in combination with 261 compact transmitter class, allowing gauge, level or absolute pressure measurements. A wide range of remote seal types are available, which allows optimum design [11].

C) Vibration sensors

A new optical technology such as Vibration Sensor Switch - VBS01 Series by Oncque Corporation, allows optical monitoring of vibration of circuit breakers and other primary equipment [12].

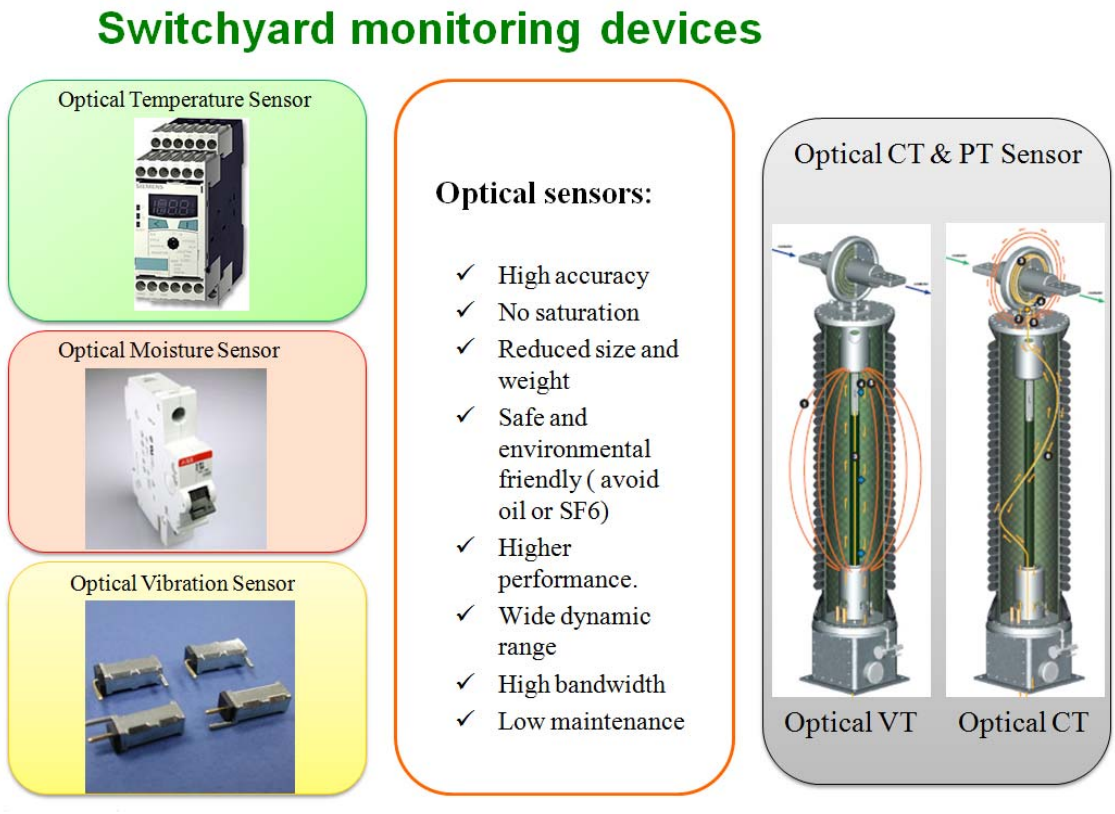

Figure 3.3 Switchyard monitoring devices

D) Oil and gas monitoring devices

Besides the protection of the transformers, the monitoring of the operation of transformers is essential as well. Dissolved Gas Analysis (DGA) monitoring is one of the most valuable diagnostic tools available. It is a procedure used to assess the condition of an oil-filled transformer from an analysis of the gases dissolved in the cooling/insulating medium. It is a well established technique that is cost effective, providing essential information from a relatively simple, non-destructive test based upon oil sampling. The results reveal much about the health of the transformer including its present condition, any changes that are taking place, the degradation effects of overload, ageing, the incipient faults and the most likely cause of major failures. Existing substations are mainly using off-line and at-line methods to evaluate the oil condition of the transformer.

The advantages and disadvantages are listed in Table 3.2. With laboratory analysis only, no real-time results can be obtained so as to ensure the monitoring of transformers at all time. With the at-line analysis, it is manual labor tasks that lacks the flexibility and cannot always guarantee the accuracy. An example of such product is Morgan Schaffe TFGA-P200 with GP-100 at-line collection device [13].

On-line and In-line DGA sensors are two new methods for transformer monitoring. Most of current substations are lacking on-line DGA monitoring devices and it can be used as a

good retrofit option. Examples of this product are TNU made by Syprotec Company, and TMDS 2000 L by Siemens Energy, Inc [14].

Table 3.1 DGA monitoring methods

Phase and its name	Definition	Advantages	Disadvantages
Off-line	Manual sampling and Lab. Analysis	Strict analyzing process, accurate and reliable	Long sampling interval
At-line	Manual sampling and in situ analysis	Immediate results analyzed	Equipment for in situ analysis required
On-line	Sampling continuously or discontinuously by side way	Automatic sampling by side way	Side way sampling required, temperature and pressure must fit the analyzer
In-line	Sensor placed at the sampling point	Located in situ real time analysis	Sensor needed to fit the measuring locale

For in-line DGA monitoring, products are now being developed and put into practice, like the TRAN-B device made by the Ningbo Tech \company in China [15]. It has the functionality to in-line monitor 4 phase with gas permeable membrane using Palladium bar field effect diode as its detection method. Similar product is the Syprotec Hydran(r) 201i produced in China [16].

E) Current and Voltage sensors

Current transformers (CTs), Potential Transformers (PTs) or Voltage Transformers (VTs), also called instrument transformers, are used to measure current and voltage signals. A current transformer (CT) produces a reduced current at the secondary side proportional to the current in the primary circuit, which can be used to conveniently connect measuring and recording instruments. A current transformer also galvanically isolates the measuring instruments. The current/voltage transformer is one of the most important interfacing sensors for measurement and relay protection subsystem. Traditional current/voltage transformer, which is still widely used in power system, is based on magnetic circuits. This may create series of problems such as measured signal bandwidth limitation, magnetic saturation, etc.

Recently, a few technologies are developed to overcome these challenges such as Gas Insulated CT (PT), Oil-minimum current transformers, Magneto-Optic Current

Transformer, optical CT and PT, etc. These technologies are described in detail in [17]-[18]. The most prominent advantages of this kind of technologies are high accuracy, no saturation, reduced size and weight, safe and environmental friendly (avoid oil or SF6), higher performance, wide dynamic range, high bandwidth and low maintenance.

3.5.2 Intelligent Electronic Devices (IEDs)

Recent multifunctional Intelligent Electronic Devices (IEDs) provide higher performance, reduction in operating cost, reduction in size, increase in efficiency and improvement in robustness in the existing substations. As an example, protection relays are widely used in all kind of substations for different purposes from individual functions, such as differential protection, distance protection, over-current protection, metering, monitoring, etc, to several protection, monitoring, control and user interface functions included in one box (Figure 3.4). The main advantages of multifunctional IEDs are that they are fully IEC 61850 compatible, have compact size and offer various functions contained together in one design. This means reduction in size, increase in efficiency and improvement in robustness which is the main design goal. New IEDs are complex and have variety of settings and functions. To be able to utilize them, one needs to very well understand their application features and performance properties. The use of different digital simulators can help in the process of testing and evaluating the IEDs and making more informed decisions about the use of various features and selection of related settings. Integrating multifunctional IEDs in one substation automation system can offer variety of benefits. To make sure the benefits are fully explored, one needs to think of new functions that can add the value to substation automation solutions. Present practices regarding IED evaluation and new function specification are very limited and need to be changed to accommodate new business needs in the industry [19]. The new IEDs need to be selected to enhance reliability and security of power system operation as well as operator productivity and decision making.

Some IED examples can be seen in Fig. 3.4. A few options for upgrading the substations are explained next.

A) Metering and monitoring relay

ABB has a product, CM-ESS that can meter and monitor over or under voltage in single or multi-phase AC or DC system. Multi-functional voltage metering and monitoring relay uses a multiplexer that has high speed synchronous communications, bit error correction, data management, and alarms with diagnostic at the same time [11].

B) Control house safety function relay

SIEMENS' Multi-Functional Safety Relay (3TK2845 multi-function device) combines multiple functions of individual safety relays in a single device [20]. Combination of individual safety function relays dealing with the room, appliance, labor and security monitoring is a unique control house safety monitoring multi-functional relay. The arrangement of the functions in the diverse variants ensures that the most common applications can be realized with minimum engineering and cost expenditures.

C) Transmission line protection relay

Combination of different protection and protection-related functions such as line protection, auto reclosing, fault location, circuit breaker monitoring can be combined in

one product. Examples of such products are Siemens 7SD600 relay which is a numerical current differential protection relay for distribution, as well as SIPROTEC 4 7SA522 for transmission, and GE F-60 for feeder protection [20]-[21].

D) Transformer protection

High-speed, three-phase, multiple winding transformer protection system, like GE T60 which is a three-phase, multiple winding, transformer relay intended for the primary protection and management of small, medium and large power transformers includes a full featured set of protection, I/O, data logging, and communications capabilities [21].

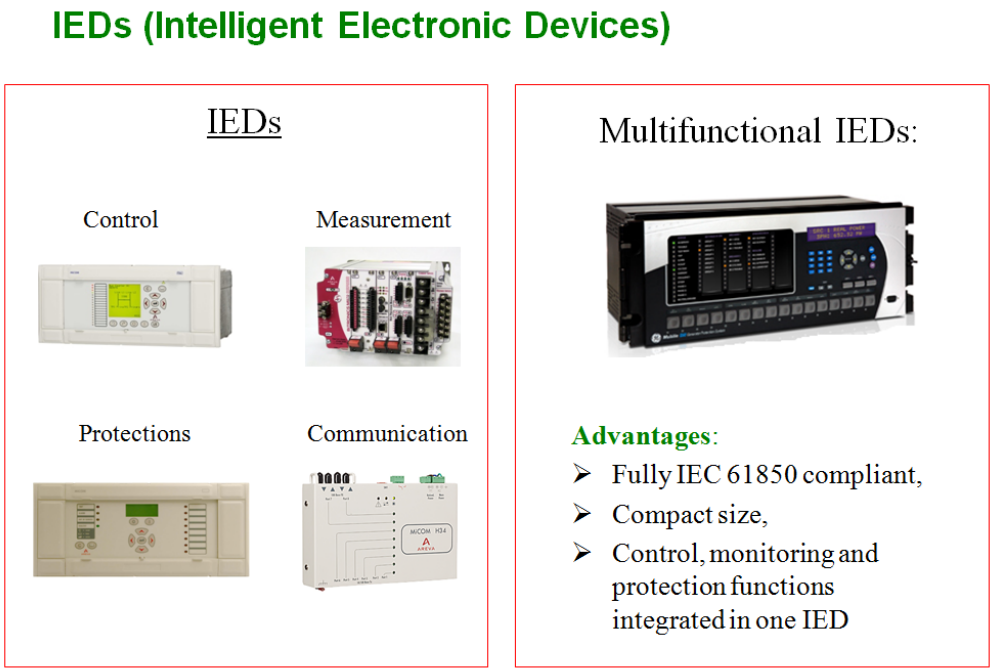

Figure 3.4 Intelligent Electronic Devices (IEDs)

E) Bus protection

Comprehensive and scalable bus and breaker failure protection for LV, HV or EHV Busbars, like GE B90, features integrated protection and breaker failure for re-configurable LV, HV or EHV multi-section busbars with up to 24 feeders [21]. One can use one or more B90s together to build a sophisticated protection system that can be engineered to meet the specific application requirements. The B90 performs fast and secures low impedance bus protection with sub-cycle tripping time averaging 0.75 cycles.

F) Fault recorder

Multi-functional fault recorder can integrate many functions associated with fault recording. Such products, like the REASON RPV-310, are a device for the acquisition, monitoring and recording of electrical quantities in applications demanding a high level of performance and flexibility [22].

3.5.3 Fiber optic cables

In a large substation, the cable length is around 200000 feet (17000 feet 12/C cable). The weight of copper wiring is pretty high, and sometimes creates interference problems. In some old substations, they have been damaged substantially by rodents [23]. The electrical substation environment has many environmental challenges to reliable and secure communications. These challenges involve high voltages, extreme temperatures, high-current faults, electromagnetic interfaces, and electrostatic discharges [23]. To overcome these challenges and to have a reliable, safe, secure and economical communications, the best option for upgrading the substations is to use fiber optic cables to interconnect all monitoring, control and protection parts.

Also, no external power is required for fiber optic transceivers which are designed to work in the harsh substation environment [23]. The reliability, performance and weight of this wiring material can affect the entire performance of the substation. The other advantages of this technology are higher speed, longer distance of transmitting information, greater immunity to electromagnetic interferences and lower cost. Both technical and cost considerations have to be taken into account in the decision to replace the damaged copper cables with fiber-optic cables. Installation of fiber optic is pretty difficult and it requires expert human resources. Also, fiber is sensitive to twist. These shortcomings should be considered when evaluating the retrofit options. The fiber optic designs are shown in Fig. 3.5.

Figure 3.5 Fiber optic

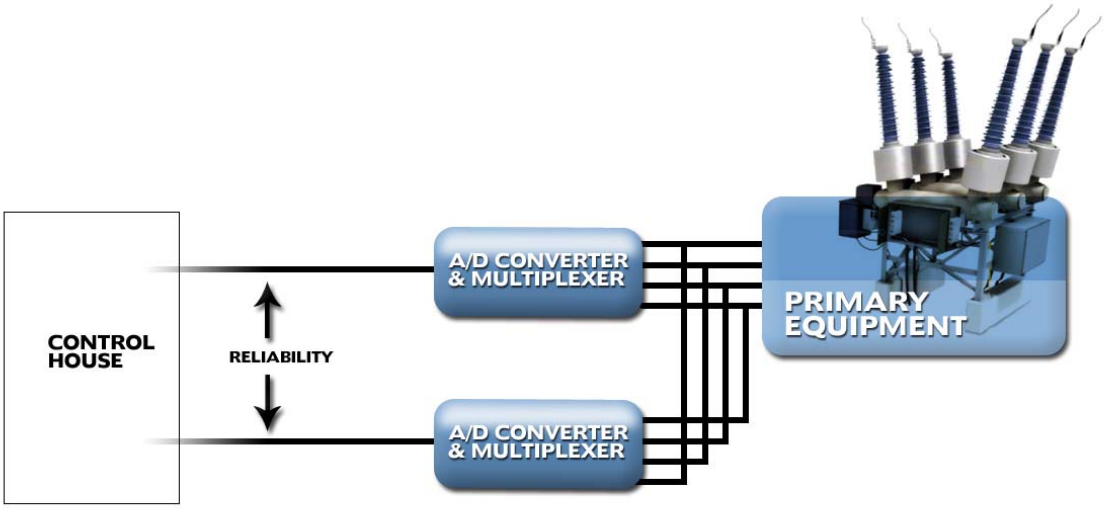

Figure 3.6 Multiplexing fiber optics together

From Fig 3.6, it may be seen that the primary equipment sensors are wired over copper cables to A/D converter block and the output digital signals are multiplexed together. Hence, each primary equipment and associated sensors use only one fiber-optic cable to transmit measurements to the control house. This saves considerable amount of wiring as the distance of primary apparatus to control house is around 1000 feet. In summary the fiber-optic design reduces the wiring need to less than half, and the cost of the fiber-optic is less than copper wires for the same use and application. The additional hardware requirements for the use of fiber-optic cable are about a few thousand dollars. By comparison the prices, considerable amount of money will be saved, and it can be easily concluded that the replacing the old wiring with fiber optic cable is economical [23]-[25].

3.5.4 Wireless communication

Wireless communication is another option for data transfer from substation switchyard to control house which does not require wire installation in the switchyard. This solution is easy to install and provides compact low cost solution. Data transfer speed is not critical because data are not used in real-time control applications. Considering recordings size and number of units in the switchyard data rate of 115 or 256 kbps should enable relatively fast data transfer. Using suggested data rate data transfer from one unit will last few seconds, which meets requirements even for relatively fast applications such as alarm processor. There are several technologies, which can be used for this purpose: Frequency Hopping Spread Spectrum (FHSS), ZigBee, WI MAX, wireless LAN etc [26]. Some of them are more suitable for harsh environment and short distances. Figure 3.7 illustrates the simple concept of wireless communication between switchyard and control house.

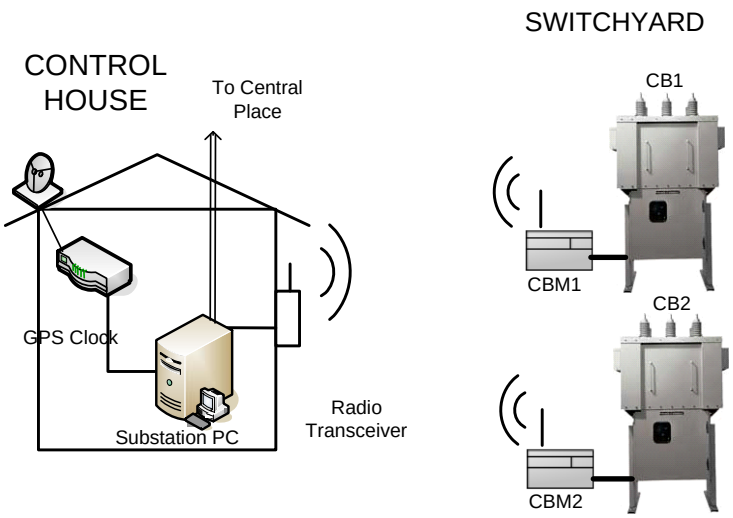

Figure 3.7 Wireless communication

In addition, several configurations could be used for this network: Multipoint and Mesh configuration, Figure 3.8 shows a few most suitable options for circuit breaker monitoring communication. Because of high level of Electromagnetic Interference (EMI) in substations, output power of transmitters should be higher than power required for normal outdoor application. Transmitter's Equivalent Isotropically Radiated Power

(EIRP) in multipoint network configuration should be around 60mW (18dBm) for 2.4GHz frequency range [27]. In some countries maximum allowed power is limited to 10dBm or 12dBm so gain antennas and repeaters could be used to enable longer distance communication. Mesh network configuration requires larger number of low power transmitter, which makes it very reliable because of multiple transfer paths through the network. Mesh network transmitters are relatively cheap and easy to use which makes them good solution especially for circuit breaker monitoring purposes. Network should also have error detection and error handling mechanism. Encryption should be considered as an options but it should not overburden microprocessor of the field unit. Sometimes encryption algorithms are even implemented in wireless transceivers so that could be easily used.

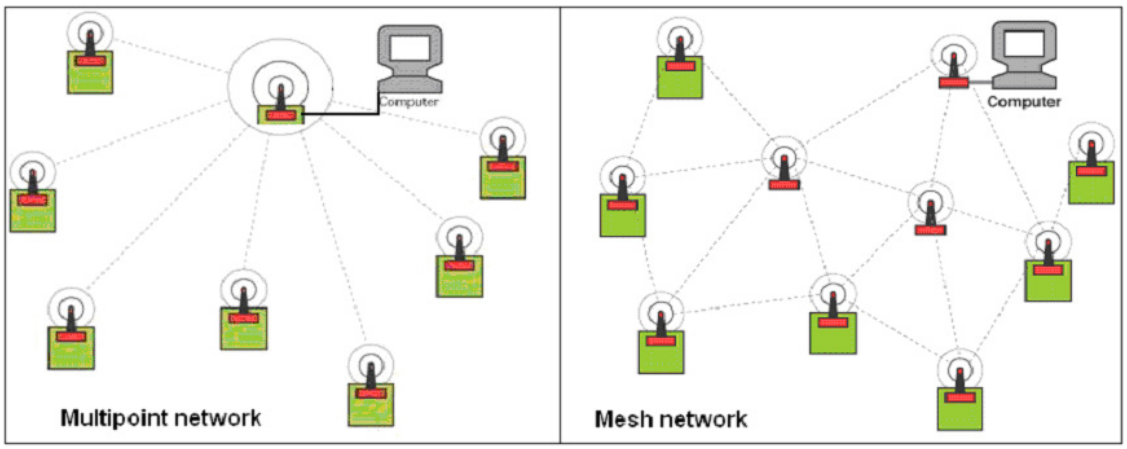

Figure 3.8 Multipoint and Mesh network configuration

3.6 Benefits of retrofit design

The benefits of retrofit of the existing substations can be summarized as follows.

- Cost reductions in operation, maintenance and service
- Prolonged equipment service life
- Higher productivity and availability of assets.
- Improving reliability, entire performance and efficiency
- Improved maintainability
- Lower installation time
- Enhanced communications
- Better utilization of data
- New functionality
- Increased cost efficiency, performance and availability of the system

Specifically, FACTS devices in spite of the relatively high cost, offer some very important benefits to the system:

- Power flow can be controlled to meet utilities' and systems' needs
- Loading capability of lines is increased significantly close to their thermal limits.
- System stability and security are increased as they limit fault currents; manage cascading blackout and damp oscillation of the systems.
- Lines' carrying capacity is enhanced since reactive power flow is reduced.

The prominent advantages of replacing the original copper-wired analog sensors by optical fiber-based sensors for monitoring and metering can be listed as follows:

- High accuracy
- Higher performance
- No saturation
- Low maintenance
- Reduced size and weight, switchgear integration and potential substation size reduction
- Safety, no risk of explosion
- Environmental friendly (avoid oil or SF6)
- Wide dynamic range and high bandwidth

Using fiber-optics in the proposed retrofit strategy minimizes the wiring requirement due to the multiplexing of multiple signals on one fiber-optic cable. This can save considerable amount of wiring. Wireless communication between substation switchyard and control house is easy to install and provides compact low cost solution.

3.7 Conclusion

In this chapter, retrofit design which is used to upgrade the existing substation is discussed. It needs to take into account legacy equipment and the need to cause minimal disruption of the continuity of services. Different advanced technologies are analyzed and considered to be a potential retrofit in existing substations. These devices may enhance the performance of a substation or can replace its existing equipment. They not only perform the main functions more efficiently but also may introduce some new functionality as well as increasing operation time of substation for at least 10 years. This will allow utilities to have time in preparing capital investment for upgrading current aging infrastructure. Such devices also help the existing substations to comply with requirements and standards of a new century substation. These equipments still play an important role in new substation design. With new standard technologies such as digital communication system or fiber optic wiring, such devices will have a better performance and synchronism with the whole substation. In addition, extensive use of fiber optic or wireless communication to replace the damaged existing copper wiring is an economical strategy for old substations.

In this chapter, different retrofit scenarios, strategies and options are outlined to retrofit the existing substations to meet some predefined requirements. Also, cost benefit analysis for each retrofit option is discussed for the purpose of utility decision making. Before any decision about retrofit, the utility should consider its own requirements and define its criteria. Different retrofit options can be taken to realize an economical and reasonable retrofit.

The following are goals concluded for this approach:

- Adding new equipments to supplement existing substation as well as paving the way for the future replacement of legacy solution
- Replacing existing equipment due to performance or age deterioration as well as making it compatible for total future replacement
- Balancing the need for open system design and cyber security demands while expanding the best practices and gradually training personnel for new equipment

.

4. New substation design

4.1 Introduction

Many transmission substations in service rated 110kV and above in the USA, are older than 40 years. They had often been built in several stages. It is usual to find in the same substation equipment belonging to different technology vintages and different manufacturers. The maintenance and operation cost is high due to the legacy devices. Besides, the legacy power apparatus may have potential safety and environment issues. When building a new substation, which does not happen very often in the USA, one has an opportunity to use prior experiences when deciding on the requirements of the new design.

The conventional Air-insulated substation (AIS) design uses a large number of disconnectors in order to allow for maintenance and repair with a minimum of interruption. The occupied area of AIS is typically large and the maintenance demand of the open-air apparatus is relatively high, particularly in case of severe environmental conditions. Besides, switchgear, its subsystems and components are exposed to aging and wearing during the years of exploitation that leads to the increase in fault events over the years of service. The attempt in the new substation designs is to make them more compact and somewhat protected from the environmental impacts.

The sensing and signal processing in existing substation designs is based on a number of individual sensors being placed in the switchyard and hard-wired directly to the control house. The individual monitoring, control and protection devices that are using those signals for their decision-making are located in the control house. This concept is not facilitating integration of data and signal processing across the substation.

The IEC 61850 substation automation standard provides higher degree of integration, greater flexibility, reduced construction and commissioning time. The levels of functional integration and flexibility of communications bring significant advantages in cost reduction. This integration affects not only the design of the substation but almost every component and/or system such as protection, monitoring and control by allowing replacement of the hardwired interfaces with communication links.

The new primary equipment design needs to be compact, environmental friendly and allow low cost of operation and maintenance. The new secondary side design is based on IEC 61850 standards and needs to utilize synchronized sampling technology and multifunctional IEDs. The proliferation of vulnerability of protection, control and automation systems using switched Ethernet communications between devices and between substations requires that the cyber security issue also be emphasized.

This section first covers the primary equipment design, then the hardware and software implementation of the secondary equipment design, and finally the benefits of the new design.

4.2 Primary equipment design

4.2.1 Gas Insulated Substation (GIS) design

The metal-enclosed gas-insulated switchgear inherently follows the criteria for new substation design and offers a higher reliability and flexibility than other solutions. Due to the gas enclosed design, GIS is the most suitable solution for indoor and underground substations. In outdoor and hybrid substations, the occupied area is tremendously reduced by using GIS technology.

GIS configurations can be applied to any type of bus bar arrangements: single busbar, double busbar, single busbar with transfer bus, double busbar with double circuit breaker, one and a half circuit breaker scheme and ring busbar. Figure 4**Error! Reference source not found.**.2 shows the layout of a GIS substation based on one-line diagram in Figure 4.1.

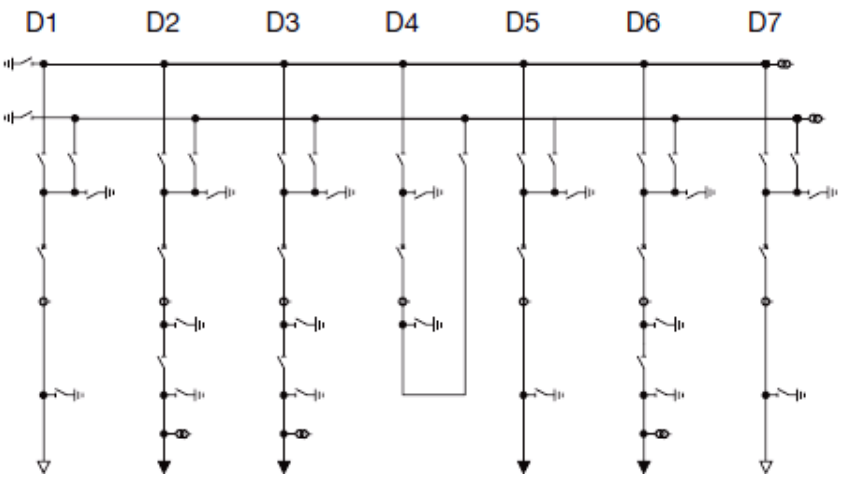

Fig. 4.1 One line diagram of double busbar [28]

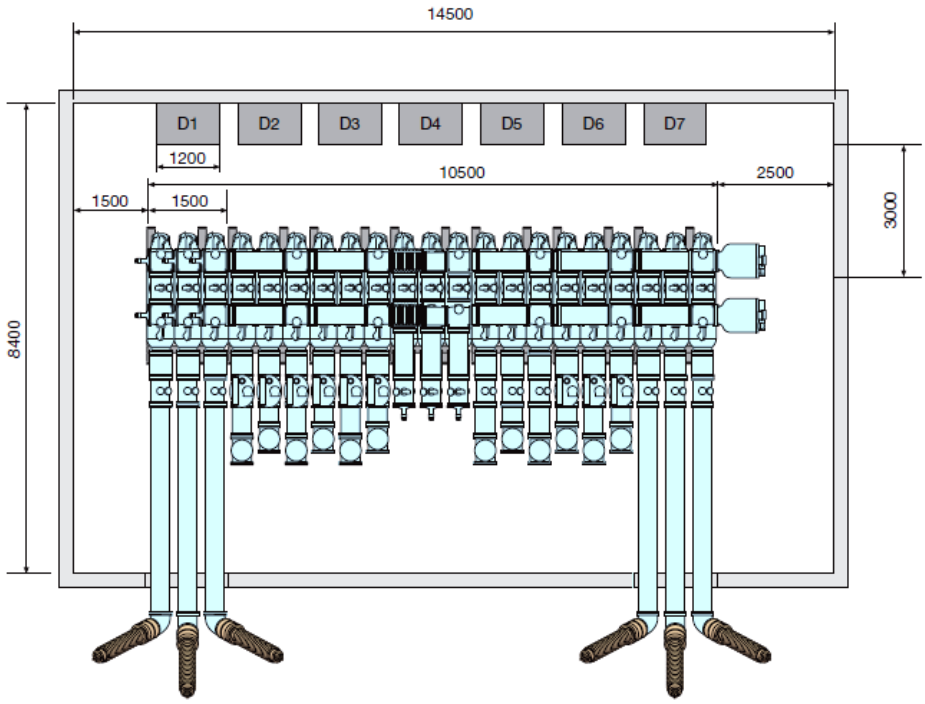

Fig. 4.2 Layout of double busbar GIS [28]

In Figure 4.2**Error! Reference source not found.**, it may be observed how the compact design of GIS reduces substation area tremendously (at least 70%) compared to the same AIS configuration. This fact allows GIS to become the choice of preference for indoor and underground substation. For a better appearance, an underground GIS substation can be design with an aesthetic view that hides its presence.

The existence of a substation could be designed so that it cannot even be recognized, such as given in example in Figure 4.2.

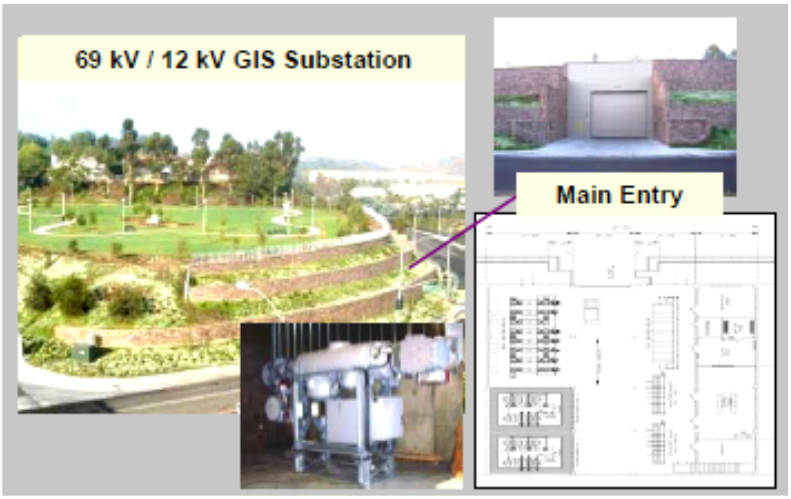

Fig. 4.3 Overview of an underground GIS substation [29]

GIS performs the same function as AIS. The compact and metal-enclosed design of GIS has prominent advantages and better performance than AIS. However, the high initial investment is a key obstacle in expanding the application of GIS. In remote or rural area, industrial areas or in developing countries, AIS is still the best choice. In places where the cost of land or cost of earthworks is high or where the sceneries cannot be disturbed by AIS, the solution is to use underground or indoor GIS.

Different type of substations has different advantages which come from its components and design. The characteristics of GIS and AIS are given in the following table.

Table 3.74.1 Design characteristic of GIS and AIS [30]

Characteristics	**Air-Insulated Switchgear**		**Gas-Insulated Switchgear**	
	AIS	Dead-tank	HIS	GIS
Type of installation	Outdoor	Outdoor	Outdoor	Indoor
Metal-encapsulated circuit breaker	-	x	X	x
Metal-encapsulated disconnector	-	-	X	x
Metal-encapsulated earthing switch	-	-	X	x
Busbar	Air-insulated	Air-insulated	Air-insulated	Gas-insulated
SF6 insulated current transformer	-	-	X	x
SF6 insulated voltage transformer	-	-	X	x
Direct cable or SF6/oil termination	-	-	X	x

From the table, the difference in design characteristics may be observed. As may be noted, the GISdesigns are supposed to be applied where one or more of the following features are desirable: limited space, extreme environmental conditions, required low environmental impact and less maintenance. The low failure rate of GIS is also a prominent advantage. But the outage time (56 hours), double outage time of AIS (25 hours), is one of the disadvantages.

Regarding economics, initial capital investment is not enough to evaluate the overall substation project. Life Cycle Cost (LCC) should be considered, including primary hardware cost, maintenance cost, operation cost, outage cost and disposal costs. The LCC comparison of AIS and GIS is as follows:

- Primary hardware: for primary equipment, GIS is more expensive than AIS. However, the price of auxiliary equipment such as support, conductors, land, installation, control, protection and monitoring can lead to a cost difference between the two systems being small.
- Maintenance: the failure rate of circuit breaker and disconnecting switch in GIS is one-fourth of that of AIS and one tenth in case of busbar, thus the maintenance cost of GIS is less than that of AIS over the lifetime.
- Operation cost: the maintenance cost of GIS and AIS shall be equivalent. The cost for training in GIS is higher than in AIS.
- Outage cost: since the failure rate of GIS is lower, the outage cost of AIS shall be greater.
- Disposal cost: the cost of decommissioning and disposal after use should be capitalized. The value of future expense must be taken into account.

The general conclusion about the LCC advantages of AIS versus GIS cannot be easily reached; hence it can only be determined in specific project. An example below illustrates the LCC comparison. In this example, GIS and AIS use H-configuration with three circuit breakers. Fig. 4.4 shows the design of AIS and GIS solutions.

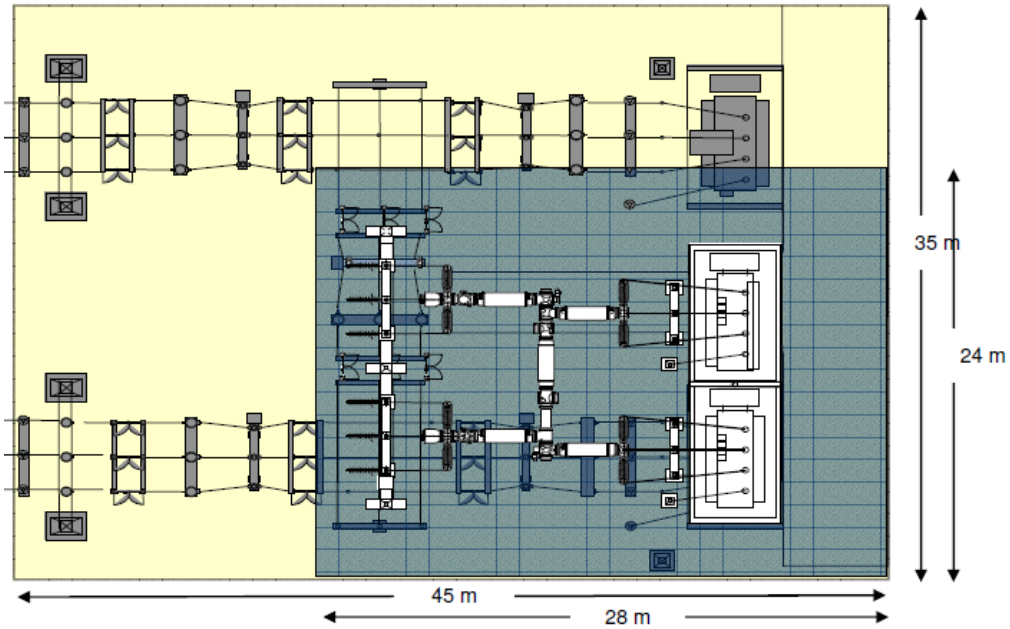

Fig. 4.4 GIS and AIS solutions in H-configuration[30]

Table 4.2. LCC evaluation of AIS and GIS (based on calculation conducted by a utility) [30]

Life Cycle Cost	**AIS**	**GIS**
Planning and Engineering	100%	80%
Real estate	100%	40%
Primary equipment	100%	120%
Secondary equipment	100%	100%
Earthwork, civil work, structures	100%	60%
Electrical assembly and erection	100%	70%
Maintenance	100%	50%
Outage	100%	50%
LCC after 10 years	**100%**	**Max 70%**

The latest GIS technology has less environmental impact than previous technology. The SF6 leakage rate is less than 1% (in experiment <0.5%) [31]. Due the design characteristics, GIS has a better impact on environment than AIS.

Table 4.3. Environment impact comparison of AIS and GIS.

	AIS	**GIS**
Primary energy consumption	100%	73%
Area requirement	100%	14%
Acidification potential	100%	81%
Greenhouse potential	100%	79%
Nitrification potential	100%	71%

As observed, GIS offers many prominent advantages over AIS. It meets all requirements for new substation design, except high initial investment and potential environmental risk. This disadvantage and the ever increasing environmental awareness become the drivers for a new generation of GIS that complies with future green field substation criteria.

4.2.2 Disconnecting Circuit Breaker (DCB) design

In order to evaluate the benefits of DCB, a typical 230/69kV is selected to compare DCB and conventional combination of circuit breaker and disconnecting switch. The substation layout and one-line diagram are shown in Figure 4.5**Error! Reference source not found.** and Figure 4.6**Error! Reference source not found.**.

The specification of the equipment in the substation is as follows:

- Transformer: 240MVA, 230/69kV
- Circuit breaker: 230 kV, 3000A and 69 kV, 3000A
- Disconnecting switch: 230 kV, 3000A and 69 kV, 3000A

The substation has four 230kV incoming lines and eight 60kV outgoing lines. As seen in Figure 4.7, the layout includes two switchyards: 230kV and 69 kV. The combinations of circuit breakers and disconnecting switches in both switchyards are replaced by disconnecting circuit breakers of the same rating. The layout of substation with new DCB is shown in Figure 4.8.

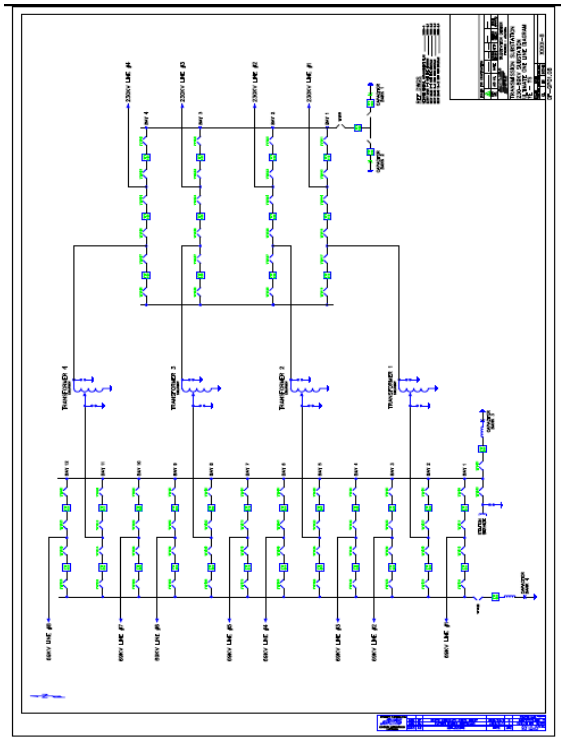

Fig. 4.5 One line diagram (source: SRP)

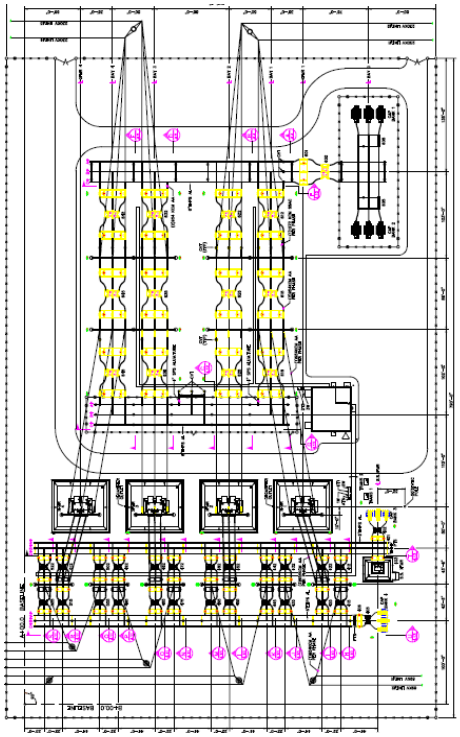

Fig. 4.6 Layout of substation (source: SRP)

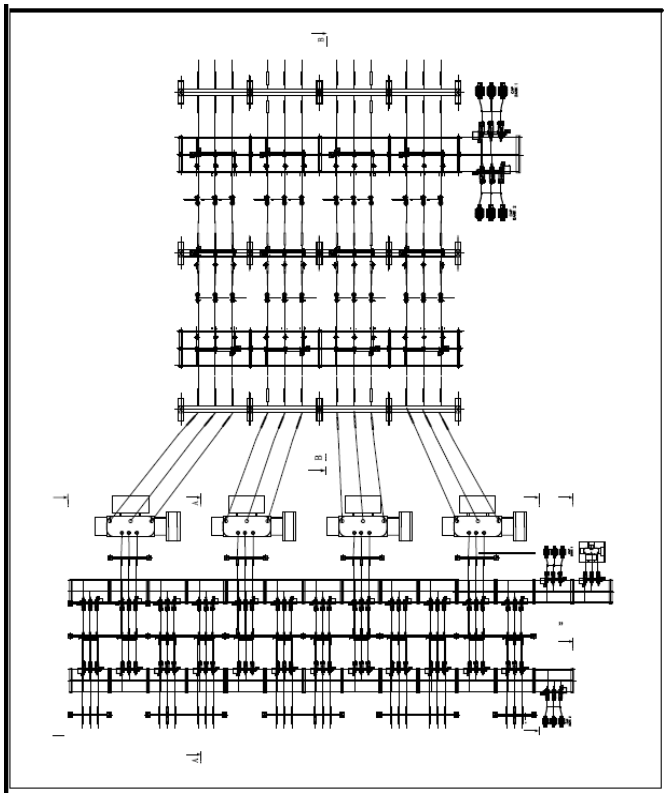

Fig. 4.7 Substation layout with Disconnecting Circuit Breaker

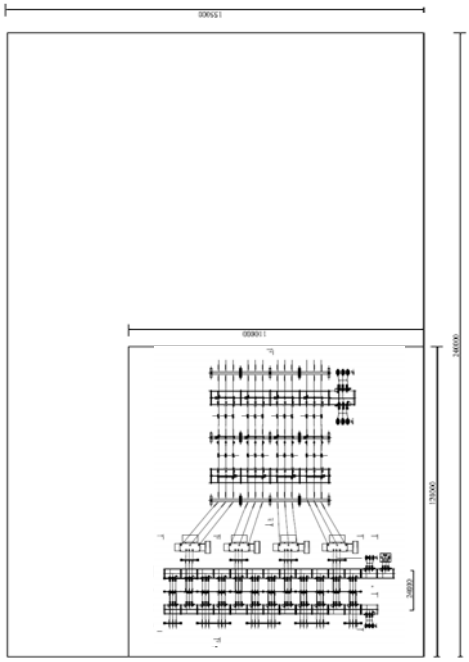

Fig. 4.8 Comparison of DCB substation and original substation areas

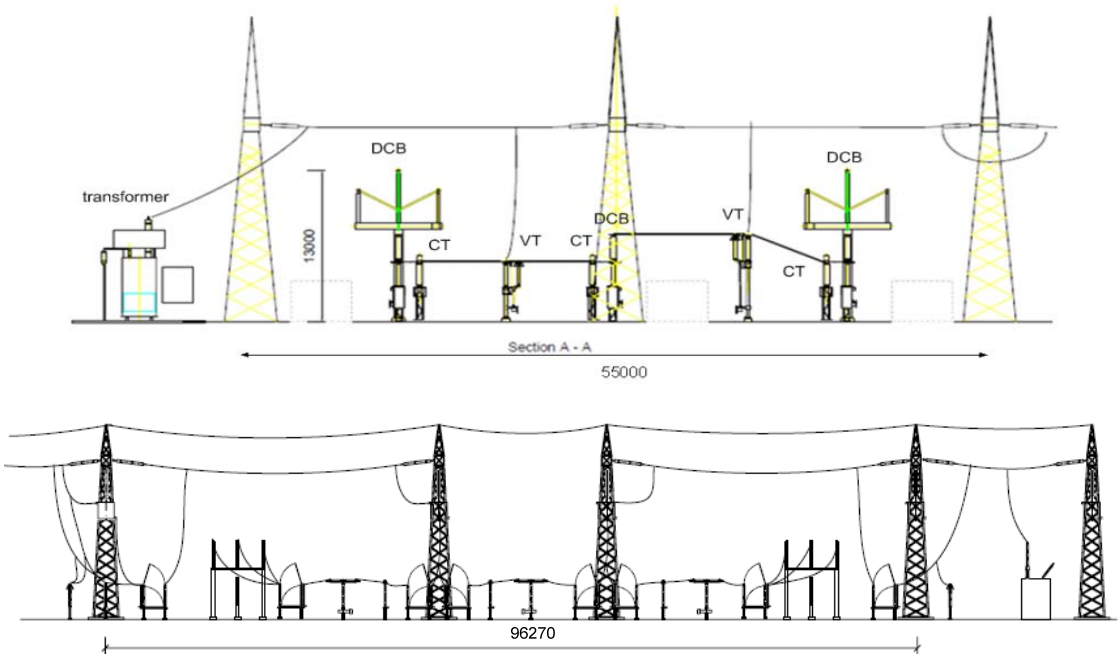

Fig. 4.9 Switchgear arrangement of DCB and conventional, one and a half breaker scheme

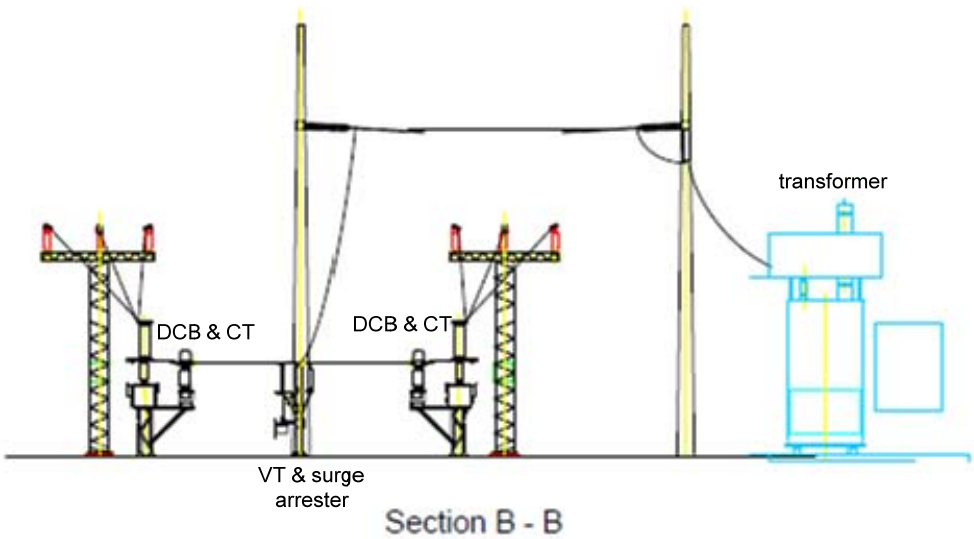

Fig.4.10 Switchgear arrangement of DCB, double busbar scheme

The cost between DCB and conventional combination of circuit breaker and disconnecting switch is compared in Table 4.4. The main features between two types of solutions in the example of specifc layouts of the two substation types may be observed.

In this evaluation, only the 230kV and 69kV switchgear is taken into account, because other primary parts are similar for both solutions. By omitting disconnecting switch when using DCB in switchgear, the substation can be much smaller and more cost effective. 20% to 50% of space requirement is saved.

Table 4.4 Comparison between DCB and Conventional CB

	DCB		Conventional	
	230 kV	69 kV	230 kV	69 kV
# of circuit breaker	15x3	26x3	15x3	26x3
# of disconnector	0	0	27x3	51x3
# of foundation	74		127	
Dimension	55m x 48m	24m x 84m	96.3m x 80.5m	26.8m x 127.7m

	Conventional			DCB		
Device	Number	Cost ($)	Total ($)	Number	Cost ($)	Total ($)
Circuit breaker	41	111,400	4,567,400	41	185,000	7,380,000
Disconnecting switch (3-phase)	78	11,000	858,000	0	11,000	0
CT, VT	165	20,000	3,300,000	165	20,000	3,300,000
Foundation	127	10,000	1,270,000	74	10,000	740,000
Total			**9,995,400**			**11,420,000**

The cost of conventional circuit breaker, disconnecting switch, CT, VT, foundation are provided by US Grid. The cost of disconnecting circuit breaker and auxiliary part are provided by ABB in reference [32]. The costs of design and planning, civil work, busbar and connection, and failure and maintenance have to be considered in the overall cost. Overall cost difference between switchgear using DCB and conventional switchgear is presented in Table 4.5.

Table 4.5 Cost comparison

	DCB ($)	Conventional ($)
Primary apparatus	11,420,000	9,995,400
Failure and maintenance	526,300	1,052,600
Busbar and connections	2,368,300	2,368,300
Civil work and sitework	11,420,000	16,841,600
Design and planning	8,420,800	10,526,000
Total	**34,155,400**	**40,783,900**

From above table, the cost of switchgear using DCB is 85% of the conventional. This is just estimated cost so the saving is in 5 to 15% range. The cost saving from land deduction (20% to 50%) would also add more to the overall saving percent, especially at places where land cost is high.

4.3 Secondary equipment design

The solutions proposed in this section utilizes advanced concept for data and information processing. The copper wiring between IEDs and power apparatus in conventional substations is replaced with optical fibers. All the multifunctional IEDs in the control house fully support IEC 61850 protocol. The recorded data is synchronized and time stamped utilizing receivers for Global Position System (GPS) or computer network synchronization (IEEE PC 37.238). The time reference signal is distributed to downstream devices or IEDs by Inter Range Instrumentation Group (IRIG) standard signal or IEEE 1588 V2 signal. Hardened Ethernet switches are used to process the message priority to realize the Generic Object Oriented Substation Event (GOOSE) messaging scheme between relays and provide security at the local area network level. The software applications include automated analysis of data from IEDs such as Circuit Breaker Monitor (CBM), Digital Fault Recorder (DFR), Digital Protective Relay (DPR) and other substation IEDs. The new system enables automated collection of field data, extraction of information and sharing of information among different utility groups allowing them to have better view of the system.

4.3.1 Hardware implementation

The overall system architecture is show in Fig.4.11.

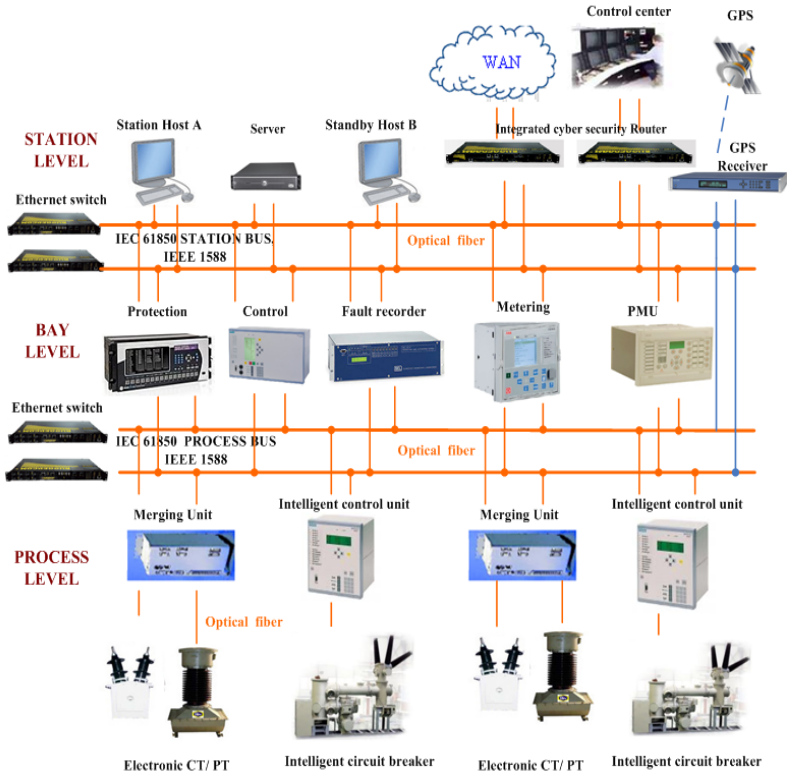

Fig. 4.11 Hardware implementation architecture

1) Process level solution

Optical current and voltage sensors are used instead of conventional transformers. The voltage and current signals are connected at the primary side, converted to the optical signals by merging unit and transferred to the protection and control devices in the control house via optical fibers. This can lower the requirement of transformer insulation and reduce the interference present in the analog signal transmission. Intelligent control units are used as an intermediate link for circuit breaker interfacing. The intelligent control unit converts analog signals from primary devices (such as circuit breaker and switches) into digital signals and sends it to the protection and control devices via process bus. At the same time, the tripping and reclosing commands issued by protection and control devices are converted into analog signals and sent to the switchyard to control the primary equipment. Large amount of copper wiring between IEDs and primary devices in conventional substations is replaced by optical fibers.

2) Bay level solution

All the IEDs in the control house fully support IEC 61850 protocol. Synchronous phasor measurements are realized by Phasor Measurement Units (PMUs). PMUs are used for wide area power system monitoring and control. The interoperation between IEDs is realized by using GOOSE massage network. The Ethernet switch is used to process the message priority to realize the GOOSE data exchange scheme between relays.

3) Station level solution

Manufacturing Messaging Specification (MMS) network, which is the communication link between SCADA, control center and IEDs at bay level is used at the station level. Redundant networks are used for high reliability.

4) Cyber security issues

Since the Ethernet switches and routers are used in the network, the major concern is the cyber security. Hardened routers are used to specifically provide an electronic security perimeter for the protection of critical cyber assets. The hardened switches are used to provide security at the local area network level.

Besides the hardened routers and switches, secured access control device is used in the new design to further protect the security of the substation. The main function of such control device is shown in Fig.4.12.

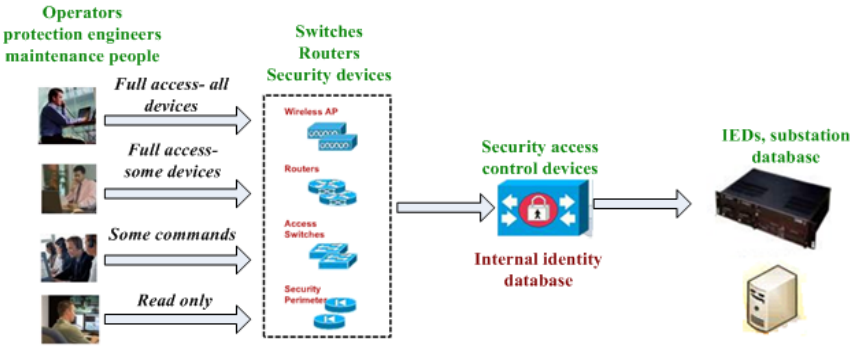

Fig.4.12 Function of security access control device

There are four levels of access to the substation database. Operators are allowed a selected access (includes read and write) to all the devices (relays, meters and controllers). Protection engineers have the full access to some devices (protective relays). Maintenance staff can only have the partial access to the devices. Customers or utilities can only read substation's information. According to the different access levels, the different passwords or secured access methods are specified [33]-[34].

5) Time Synchronization Methods

Modern protection, monitoring and control systems rely on the availability of high accuracy time signal. Time synchronization eliminates or reduces the effort involved in correlating event information from distributed intelligent disturbance recording devices. Accurate time signal is required for disturbance analysis in order to correlate individual device event reports and is essential for synchronized system control and synchrophasor utilization. Moreover, time synchronization is also required when integrating data from different IEDs in different locations. GPS is the most common source to provide high accuracy time signal in current substations. Hence, the GPS becomes the single point of failure caused for example by solar activity, intentional or unintentional jamming, or U.S Department of Defense (DOD) modifying GPS accuracy or turning off the satellite system [35].

IEC 61850 recommends the Network Time Protocol (NTP) as the primary synchronization method, but NTP time accuracy is insufficient for Sampled Values (SV) applications (< 1 µs). IEEE 1588 Standard for a Precision Clock Synchronization Protocol for Networked Measurement and Control Systems may be adopted to distribute the 1 µs timing accuracy. IEEE 1588 uses the LAN cables to distributed high accuracy time, eliminating the need for the additional IRIG cabling compared to separate IRIG time reference distribution. Clocks that support the IEEE 1588 standard have more options for alternate time sources which will provide time source redundancy.

RuggedCom devices (RSG 2288 and RS 416) [36] suggested in the new design are capable of receiving 1588 V2 through their Ethernet ports and distributing 1588 V2 or generating synchronized IRIG-B signal for legacy devices. Those devices used in the design make implementation of the IEC 61850-9-2 "Process Bus" more economical, more practical and easier to deploy by providing reliable and precise time synchronization over the substation Ethernet network. Besides, the new design facilitates the migration path from legacy solutions and paves the way towards IEC 61850 Edition 2.

4.3.2 Software implementation

In order to integrate data from multiple substation IEDs and extract information for different utility group uses, a software package, which can combine bulk of data recorded by individual substation IEDs such as DPRs, DFRs, PMUs and CBMs and streamline it to provide a more relevant and versatile source of information to serve control center applications is used.

Fig.4.13 shows different levels of software-based analysis. The system wide analysis includes fault analysis and fault location (FAFL). The substation level analysis includes Digital Fault Recorder Analysis (DFRA), Circuit Breaker Monitor Analysis (CBMA), Power Quality Monitor Analysis (PQMA) and Digital Protection Relay Analysis (DPRA). The monitoring/ tracking level includes: Verification of Substation Database (VSDB), Two-stage State Estimator (TSSE), Substation Switching Sequence Verification (SSSV) and the Identification of Substation Database (ISDB). In this report, the substation level analysis is of main ncerned. The substation level analysis provides information to serve control center applications such as fault location, topology processor for state estimator and alarm processor. This analysis together with power system component models can provide system with wide level disturbance monitoring and analysis solution.

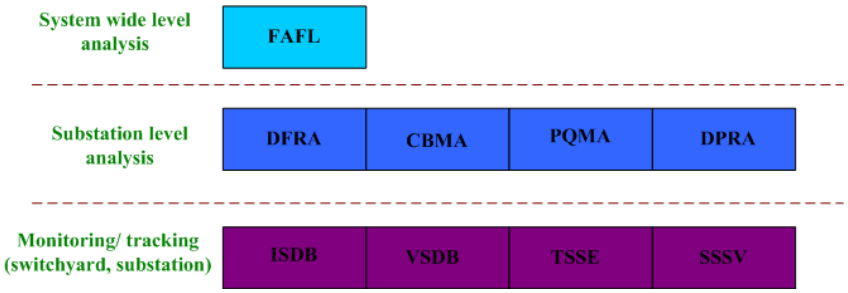

Fig.4.13 Software implementation architecture

The substation data is divided into two categories: non-operational and operational data [37]. The software discussed here is adding the nonoperational data from relays, recorders and PMUs to SCADA data, because redundancy of data is very important in data analyzing and decision-making process. The new data processing uses standardized data and communication formats.

Fig.4.14 shows a simplified diagram of the substation level integration of data. Data is collected from IEDs in Common Format for Transient Data Exchange (COMTRADE), and if not, the native format is changed to COMTRADE first, and then the data is processed at the substation level and populated into the database together with the automated analysis reports and recording system configuration information.

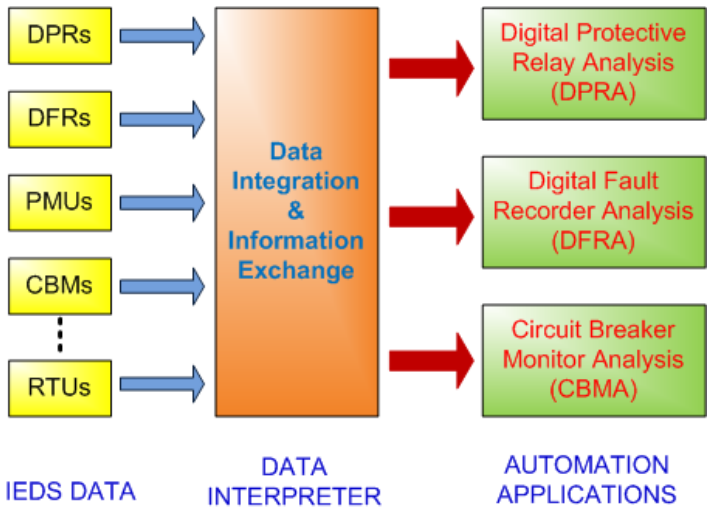

Fig.4.14 Substation level data integration

Three types of the automated analysis applications: CBMA, DPRA, and DFRA will be discussed briefly here. IEDs are synchronized to the GPS reference clock and time-stamped data makes integration of data from different IEDs much easier.

IEDs from various vendors may have different data files formats, so it is necessary to standardize file format before data integration.

1) CBMA

CBMA is an application based on analysis of records of waveforms taken from the circuit breaker control circuit using a Circuit Breaker Monitor (CBM), explains event, and suggests repair actions [38]. CBMA uses advanced signal processing and expert system techniques to enhance speed and provide timely results that are consistent. It enables protection engineers, maintenance crews and operators to quickly and consistently evaluate circuit breaker performance indentify performance deficiencies and trace possible reasons for malfunctioning. The event report includes several sections: the first section provides the date and time when event occurred, as well as general information regarding device; the second section (Signal Processing Log) provides information regarding analysis operation and if there is no problem in data processing this area is

empty; the third section (Expert System Log) provides information about signals affected by tripping operation and points out abnormities; the last section (Maintenance and Repair Operation Log) suggests possible actions to be taken in repairing the device. The main function of CBMA is shown in Fig. 4.15.

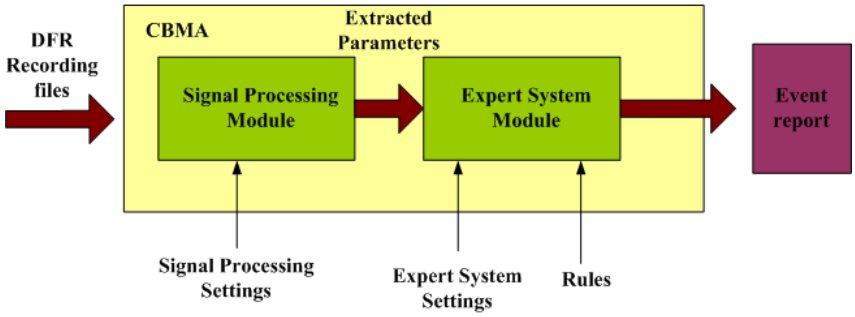

Fig. 4.15 CBMA function diagram

2) DPRA

DPRA is expert system based analysis software which automates validation and diagnosis of Digital Protective Relay (DPR) operation [39]. It takes various relay reports and files as inputs and using embedded expert system generates a report on the results of analysis. Validation and diagnosis of relay operation is based on comparison of expected and actual relay behavior in terms of status and timing of logic operands. The analysis report summarizes general fault information such as fault inception/clearance time, fault type and location and lists logic operands and notifies their status and operating sequence. If some operand failed to operate, the verifying action will be suggested. The main function of DPRA is shown in Fig.4.16.

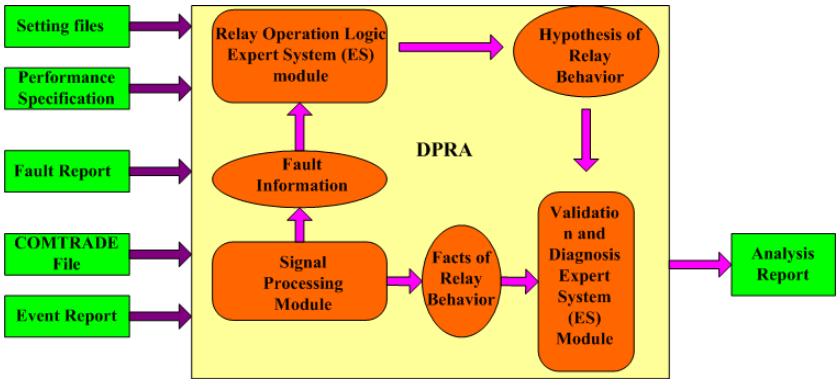

Fig. 4.16 DPRA function diagram

3) DFRA

DFRA provides automated data analysis and integration of Digital fault Recorder (DFR) event records [40]. It provides conversion from different DFR file formats to

COMTRADE. Besides, DFRA performs signal processing to identify pre- and post- fault analog values, statuses of the digital channels (corresponding to relay trip, breaker auxiliary, communication signals), fault type, and faulted phases. It also checks and evaluates system protection, fault location, etc. The report consists of several sections: the first section (Expert System Log) displays event summary and time (in cycles) required for device to act in detecting faulted line and clearing fault; the second section (Event Origin) displays affected circuit and substation; the third section (Event Summary) provides general information about fault clearing and device operation; the fourth section (Analog Signal Values) display pre-, during and post- fault value of voltage and current; the last section (Digital Signal Status) displays time of device trip operations. The main function of DFRA is shown in Fig. 4.17.

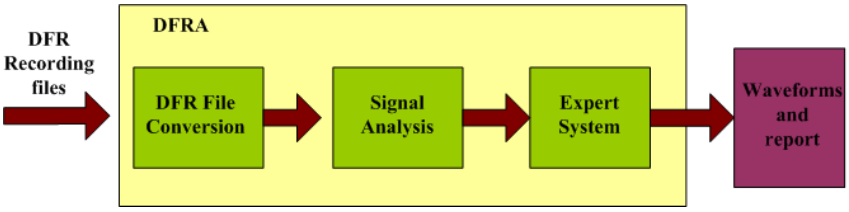

Fig. 4.17 DFRA function diagram

4.4 Benefits of the new substation design

According to the criteria mentioned in Chapter 2, the benefits of the primary equipment design are as follows:

The GIS has the following benefits:

- Higher operational safety
- Higher availability and reliability
- Lower maintenance requirement
- Lower environmental impact
- Lower operating cost
- Ability to install where space is limited.

DCB based primary equipment design has the following benefits:

- save equipment cost
- reduce the footprint and related construction cost
- increase availability

The benefits of the secondary equipment design are as follows:

- Cost: Optical fiber replaces costly copper wires, which saves investment money,

and reduces the construction labor and maintenance cost;

- Reliability: Redundant design improves the reliability of the whole system, and some level of self-healing can be realized by automatic transfer scheme between different IEDs which could be done by GOOSE messaging;

- Data sharing: Automatic data analysis software used in the control house allows data sharing among different utility groups improving their understanding of the events;

- Cyber security: hardened switches and routers provide the first level security and the secured access control devices provide further protection.

4.5 Conclusion

The conclusions based on the new solutions discussed in this chapter are:

- Both the primary and secondary design merge the existing technology and new design criteria;

- GIS provides higher operational safety, lower operation cost and lower environmental impact, but high installation cost;

- DCB based primary design provides lower equipment cost, the footprint and related construction cost, higher availability;

- Process bus in the secondary design replaces the cooper cables at the process level and realizes the peer-to-peer communication where the IEDs can communicate using GOOSE messages.

- The new synchronization method based on the IEEE 1588 V2 communication profile is used in the new design, which paves the way for the future time reference;

- Cyber security issues in the new design are considered and double level protection is proposed;

- Automated integration of IED data allows more comprehensive view of the fault events and related consequences;

- The new monitoring and control system makes the data access transparent, so the substation and control center applications can access data in the same manner;

- The new design benefits multiple utility groups: protection, maintenance and asset management, and operations;

- The substation level analysis combines the system components configuration to make an accurate system for wide monitoring possible.

5. Future substation design

5.1 Introduction

The main features of a future substation are high reliability, economical benefit, simplicity, intelligence, modularization and low environmental impact. Driven by these requirements, as well as significant technology developments, a new concept for the substation of the future will emerge.

Designing the substation of the future will require an understanding of interaction between the primary and secondary equipment in the substation, the transformation of primary system parameters to secondary quantities used by multifunctional intelligent electronic devices (IEDs), and the availability of new types of sensors that eliminate many of the issues related to conventional instrument transformers.

The substation of the future will be based on modular approach to the design of the substation primary system, the multifunctional IEDs providing protection, control, measurements, recording and other functions, as well as their integration in substation automation systems with advanced functionality. The electricity markets are being restructured to become more competitive and to facilitate bulk power transfers across wider geographical regions. A critical implication of this restructuring will be to make electricity markets even more intensely data driven, creating a need for better ways of monitoring market activity in real time and sharing information among market participants.. Future "smart" substations will be capable of providing such information. In the future power system electrical events affect not only the operation of the power system, but also operation of the electricity market [2]. It can be conjectured that the importance of an electric event should consider the economic importance of the event, and the economic impact should be taken in consideration when electrical alarms occur. Therefore, it is proposed that alarm issuance and alarm processing should include economic information in addition to the traditional alarms. In this section, an Intelligent Economic Alarm Processor (IEAP) structure that combines alarm processing techniques at both the substation and control center level will be presented.

5.2 Primary equipment design

5.2.1 HTS (High Temperature Superconductors) substation

Many applications of superconducting technology such as HTS cable, HTS transformer, HTS Fault Current Limiter (FCL), Superconducting Magnetic Energy Storage(SMES) are analyzed (detailed technology descriptions are in Appendix 2). HTS cable, HTS FCL and SMES are commercially available now but their installations are still limited. HTS transformer is expected to go into market in a few years. The proposed applications are essential equipment in a substation. A distributed superconducting substation is feasible: superconducting substation contains HTS transformer as the main transformer, HTS cable for conducting, Superconducting Fault Current Limiter (SFCL) for fault current limiting and SMES for controlling voltage stability and power quality problems. The substations will have one cryogenic refrigerator system to provide liquid helium for every HTS device. This would be more economical than using one cryogenic refrigerator for each HTS device. The superconducting substation meets the requirement for a green field

substation with the respect of high efficiency, reliability, flexibility, reduced CO_2 emission, aesthetic view and safety.

A HTS system integrated concept was proposed in [43] as shown in Fig. 5.1. The substation has capacity of 100MVA at 24kV and substation area is 60m x 40m.

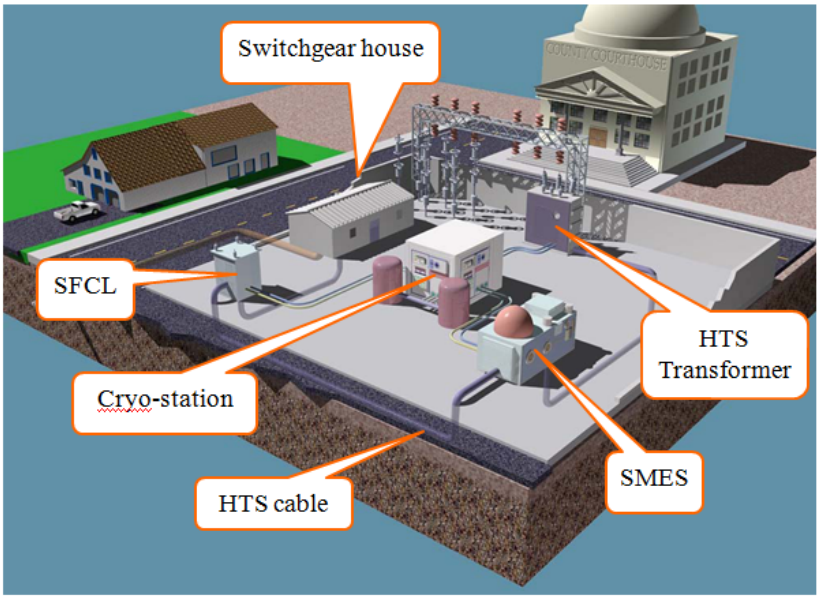

Figure 5.1 Superconducting substation

The specifications and cryogenic system cost for each HTS device are presented in Table 5.1. The price of cryogenic system increases with capacity required. Current available large scale crycooler device has average price of $100-150/W. In this example, the price $150/W is selected. The total cost may not be exact due to the cost of additional cryogenic lines connecting cryocooler and devices. The costs of devices are estimated based on the percent of cryogenic system cost over the total HTS cost using data from [44].

Table 5.1 Specifications and cryogenic system cost

Component	Specification	Cryo-power	Cryo Cost
Transformer	100 MVA, 3 phase	240 kW	$450,000
SFCL	30 MVA	240 kW	$450,000
SMES	30 MVA	12 kW	$50,000
Transmission line	100MVA, 3-phase, 500m	260 kW	$500,000
Total – separate refrigerators		***752 kW***	***$1,450,000***
Super single refrigerator		**700 kW**	**$1,000,000**

From the above table, a single refrigerator can save up to 30% and is more efficient compared to separate cryogenic generators. The superconducting substation offers many advantages over conventional substation.

- High transmission and distribution efficiency
- High reliability, quality and flexibility
- Extended lifetime and reduced maintenance since the system is not affected by outside environment.
- High safety level, so it can be located closer to load areas.
- Smaller size with 50% to 70% size reduction.
- Indirectly reduced CO2 emission and global warming
- Better aesthetic view

Based on the mentioned characteristics, the superconducting substation may be a viable choice for green field substation design. In the next decade, individual HTS devices may be utilized where special features that conventional systems cannot provide are required. Due to the high cost of HTS wire and limitation in cryogenic generators and superconducting applications will not have significant impact on the utility system in the coming years.

In the long run, the future of superconductors is very bright and it promises a serious influence in the substation design. Renewable resources which are located far away from load area can be connected by superconducting cable with virtually no loss. The distribution substation will be brought closer to the load center without worrying about the effect of magnetic field and aesthetic view. This prospect will save our atmosphere from CO_2 and toxic gas and prevent the global warming, which is a worldwide concern.

5.2.2 Solid state transformer

Solid state transformer (SST) has the same function of stepping-up or stepping-down voltage levels as conventional iron-core transformer (detailed technology descriptions are in Appendix 2). The new transformer does not face the undesired properties of the conventional one such as bulky size, regular maintenance and power quality issues. High-frequency converter, the heart of solid state transformer is now feasible due to Silicon Carbide (SiC) materials. The main advantages of SST are reduced size and weight as it uses high-frequency converter as seen in Fig 5.2.

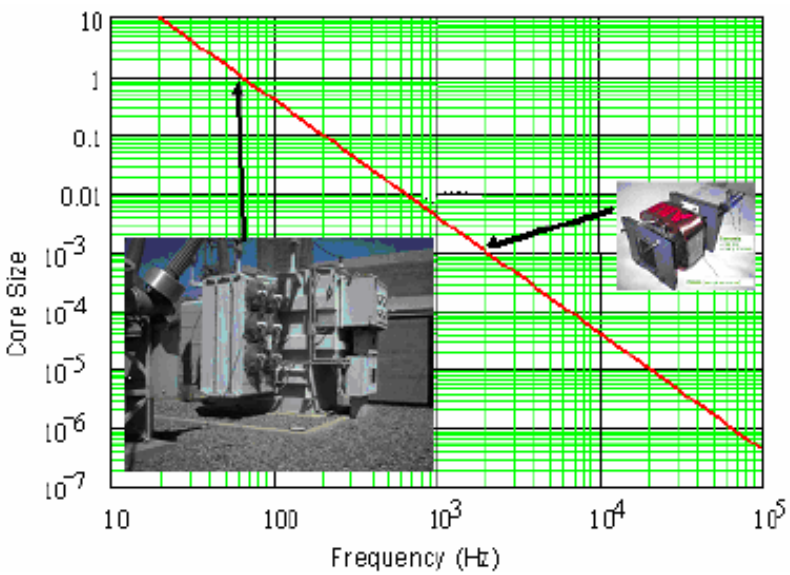

Figure 5.2 Superconducting substation

Solid state transformer has a big potential in replacing conventional transformer in transmission and distribution substations.

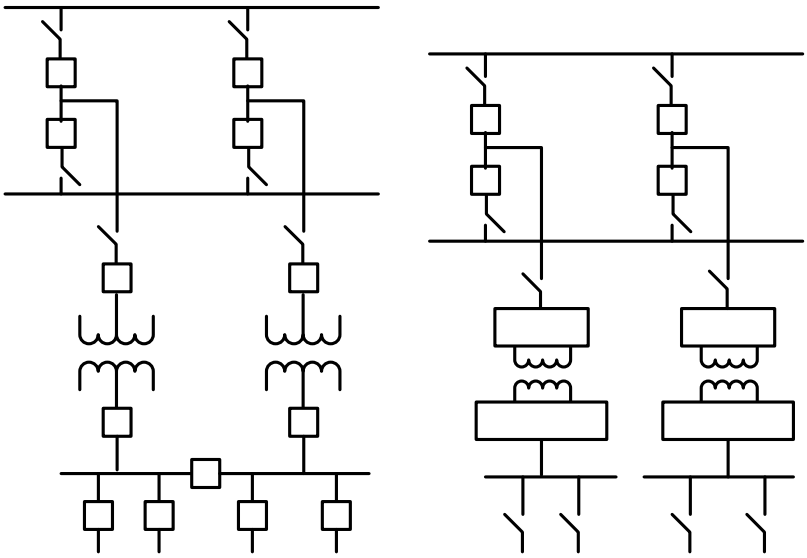

Figure 5.3 Simplified conventional transformer substation (left) and Solid state transformer substation (right) [45].

Figure 5.3 shows the diagrams of conventional and solid state transformer based substations. Due to the operation of semiconductors, once it has ceased to operate, no power will pass the high frequency transformer. Hence, HF transformer also acts as a circuit breaker. There will be no circuit breaker needed before and after the transformer like in traditional design. The substation area is significantly reduced thanks to the smaller size of SST (about 75%) and lack of circuit breakers.

The most significance that solid transformer brings to the proposed design is the degree of controllability in transforming AC voltage. For example, phase balancing and harmonic distortion are inherently regulated since power is converted though a single HF converter. Other operating benefits of SST have been analyzed more clearly in section 2.1 of Appendix 2.

Another feature is that either side of SST can operate asynchronously so it can have the same functionality as back-to-back HVDC or variable frequency transformer. The waveforms of either side of SST can be AC or DC, thus a DC converter system can provide interfaces to batteries for energy storage and connection to fuel cells or solar cells. This ability can be considered a potential form of HVDC terminal with the integration of transformer, especially when renewable energy becomes one of the main energy sources.

The solid state transformer with silicon carbide material has many advantages over conventional transformer in operation and size issues. The properties and features of SiC SST are inherently essential for a smart gird that the national electric network is turning to. The commercial availability of SST is hard to identify because most SST projects are under research and no prototype of SST has been made. Another factor that hinders the development of SST is its high cost, at least 20 times more than the conventional transformer [45]. SST with high frequency converter is also a highly potential alternative to a conventional HVDC station. It provides benefit in dynamic performance, rigid space requirement, reduced filtering requirement etc.

SiC technology definitely will take an important part in the advancement of power electronics in transmission and distribution systems. High voltage power electronics devices will have higher efficiency, less complexity, smaller size at affordable cost, challenging the conventional AC devices. However, the use of SST and other solid state devices still need further development to be commercially available and viable.

5.3 Secondary equipment design

5.3.1 Fiber-optic multiplexed sensors and control networks in the future substation

An idea to multiplex data from multiple sensors on the digital communication link and then use the data at the substation level by different processing units were initiated some time ago [46]. Recent developments in the standards for substation automation integration are allowing interconnection among intelligent electronic devices (IEDs) from different vendors available in modern substations into one system.

In this section, a multiplexed sensor network is proposed for bringing signals into a control house very efficiently. A common signal processing set of feature extractors that will serve multiple applications in the substation is placed at the point where the analog to digital conversion takes place. The integration offers the flexibility in defining new applications that can be made transparent to the given substation layout or sensor network arrangement due to the availability of all data in the same format and at the same location (database).

The Fabry-Perot interferometer (FPI), also called the Fabry-Perot etalon, consists of two mirrors of reflectance R1 and R2 separated by a cavity of length L. It is used as a sensor that allows multiplexing of analog measurements.

Benefits of the FFPI over conventional sensing technologies for instrumentation of the electric power grid include [24]:

(a) Immunity to electromagnetic interference, reduced susceptibility to lightning damage, and freedom from grounding problems, which affect other sensors in the presence of high electrical currents and voltages;

(b) The ability to locate electronic equipment used in sensor monitoring and signal processing at remote distances from the sensing elements themselves;

(c) High sensitivity to a variety of measurands;

(d) The ability to multiplex many sensors to diverse types over a single optical fiber lead connection;

(e) Small size and light weight for the sensing elements;

(f) The potential for reduced life-cycle cost of instrumenting the electrical power grid.

Multiplexing is defined as the use of one optical source to supply light to multiple sensors, the use of one photodetector to convert the optical signal from multiple sensors, and the use of one electronic signal processor to compute measurand values for multiple sensors. Multiplexing reduces the cost per sensor. Its application is essential to cost-effective instrumentation of substations, where many points are to be remotely monitored. Architecture of the multiplexed sensor network, together with an associated Signal Conditioning Unit (SCU) is shown in Figure 5.4.

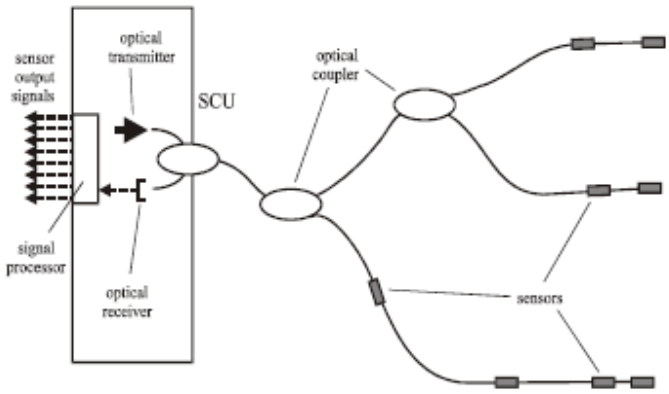

Figure.5.4.Multiplexing arrangements for FFPI sensors

This distributed processing paradigm represents a conceptual shift from the conventional centralized model, in which all sensor output are sent to the central location for processing and decision making , saving precious transmission bandwidth and computing power.

5.3.2 Intelligent Economic Alarm Processor (IEAP) concept and design

The advent of electricity market deregulation has placed great emphasis on the availability of information, the analysis of this information, and the subsequent decision – making to optimize system operation in a competitive environment. This creates a need for better ways of correlating the market activity with the physical system states in real time and sharing such information among market participants. Future "intelligent" substations should play an important role in the overall "Smart Grid" by providing such information.

Since the power system events affect not only the operation of the power system, but also the electricity market, it can be conjectured that the importance of an electric event should be expressed in terms of the economic importance, and the economic impact should be correlated with electrical alarms [47]. Therefore, it is proposed that alarm issuance and alarm processing should include economic information in addition to the traditional alarms.

In this section, Intelligent Economic Alarm Processor (IEAP) architecture to bring the electricity market function into the future substation design is proposed. The basic concept is to link the electricity market operation with real-time monitoring of the physical grid providing market participants and operators with economic information associated with trends in the physical system. This idea was raised in a recent reference [47]. The alarms are ranked based on the economic severity. In the proposed approach, a set of predetermined events that would give certain suppliers the ability to exercise market power will trigger an alarm. The new alarm processor proposed in this study further extends that original idea. It first gives a list of the fault occurrence possibilities based on the SCADA/IED signals received. Following these events, changes in power flows, LMPs and other economic indices is calculated and analyzed. A closer cause-effect relationship between the physical power system and the market is provided. Both physical and economic alarms are translated into easy-to-understand information to operators and market participants.

A. Basic assumptions

The market structure for buying, selling and scheduling electricity includes forward bilateral contracts as well as centrally coordinated markets for day ahead, hour ahead and real time energy and ancillary services. Once the forward markets have closed, the real time market operation coincides with real time system operations. Schedules from the forward markets are implemented in the real time dispatch and resources made available through the markets to provide ancillary services are selected and dispatched by the system operator for balancing (or load following) and regulation. In our example the locational marginal prices (LMPs) from the real time market are used for financial settlements of the real time dispatch and transactions.

When an operating parameter, such as voltage, exceeds acceptable threshold, the system shifts spontaneously (dotted line in Figure 5.5) to an unstable "Emergency" state. The result is usually an automatic control action (solid line), such as the tripping of a relay, which takes the system into a more stable but not fully functional "Restorative" state.

Analogous states and transitions are also applicable in power markets, with some notable differences, as shown in Figure 5.5.

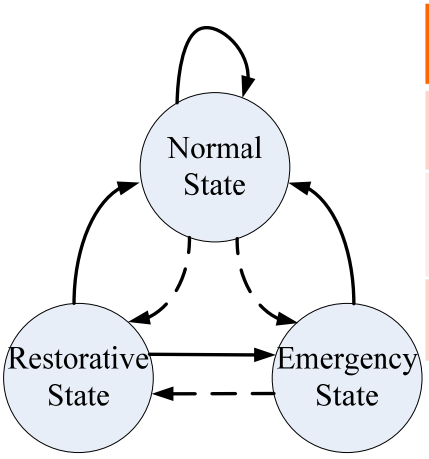

Type	Configuration	Market Parameters
Normal	All MPs Complete	Within limits
Emergency	All MPs Complete	Parameters violate the limits
Restorative	Structure incomplete	Within limits

***MPs (Market Participants) include generator companies, transmission owners, load serving entities and other nonasset owners such as energy traders.**

Figure 5.5 Grid and Market operating states

If system reliability is not immediately threatened, the Intelligent Economic Alarm Processor, proposed below, would give market participants advanced notice of an imminent need to find additional resources to serve scheduled loads, find replacement transmission transfer capability, or meet ancillary services needs. Marketers may often be able to find economic resources more readily if they are given advanced notice about the physical state of the system.

B. Intelligent Economic Alarm Processor (IEAP) model

The overall architecture of the proposed IEAP model is shown in Fig.5.6.

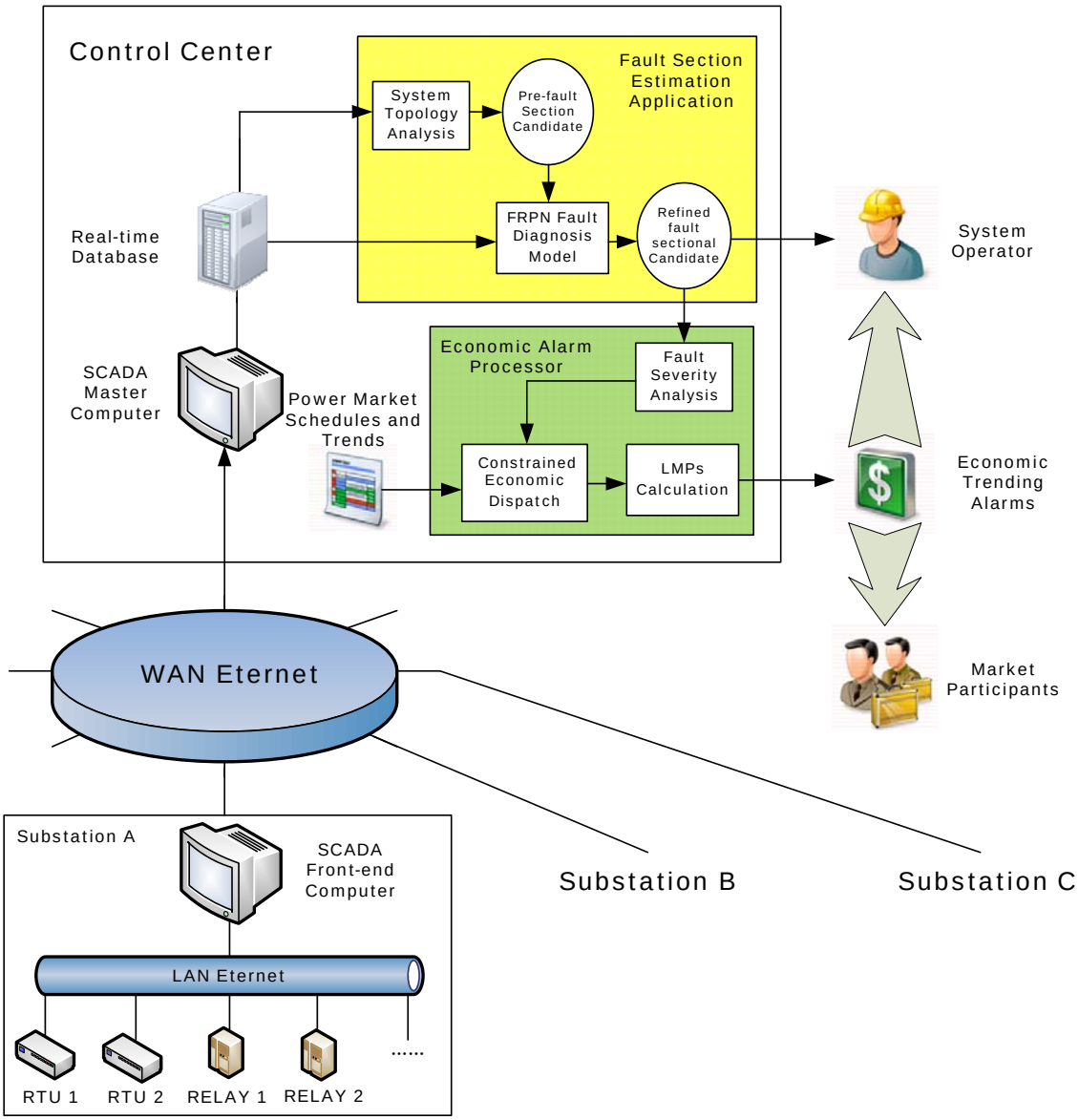

Figure.5.6 Intelligent Economic Alarm Processor Architecture

The fault analysis module uses a Fuzzy-Reasoning Petri-Nets alarm diagnosis model which has been proposed in our previous work [48]-[49]. This solution

- Possesses the strength of both Expert System and Fuzzy Logic as well as parallel information processing
- Provides the optimal design of the structure of FRPN diagnosis model
- Gives an effective matrix based reasoning execution algorithm

A detailed mathematical model establishment of the IEAP is in the Appendix 2. Reference [47] discussed another example. Ideally, the economic trending module will yield the following information:

- Cause-effect relationship of the fault
- Anomalous changes in the LMPs;
- Trigger alarms based on power transfer volumes (as with the MW triggers for generation or lines in conventional alarms);
- Identification of predicated limitations of available transmission capability (ATC) that is problematic;
- Identification of energy needs as a consequence of planned events;
- Predicated high reactive power demands.

5.4 Benefits of the future substation design

In this part, a vision about future substation design of 20 years, 50 years or even more has been proposed. In a near future, there is no feasible technology that can replace AIS or GIS totally. The vision of GIS will keep changing to meet the criteria of green field substation more fully. Some of desirable changes in GIS technology will appear in the near future. The appearance of fault current limiter will reduce the number of circuit breakers and short circuit current to clear. Thus, a simpler breaker scheme will lead to lower cost. Solid state breaker if available could eliminate the mechanical drive and simplify the geometry so that GIS could be designed in a much simpler and cost-effective way.

A distributed superconducting substation is feasible. Superconducting substation containing HTS transformer as the main transformer, HTS cable for conducting, SFCL for fault current limiter and SMES for voltage stability and quality problem are envisioned. The substation uses one cryogenic refrigerator system to provide liquid helium for every HTS device. This would be more economical than using one cryogenic refrigerator for each HTS device. With the new generation of superconducting cables, the power flow is increased 2 to 3 times from that of the existing right of way. Economic losses from outage or quality disturbance are rare. Importantly, the environmental impacts are reduced significantly. HTS substation is expected to come to market in 20 to 30 years.

SiC technology definitely will take an important part in the advancement of power electronics in transmission and distribution systems. High voltage power electronics devices will have higher efficiency, less complexity, smaller size at affordable cost, challenging the conventional AC devices. Superconducting substation will be able to deliver large amount of energy over a long distance into load area. To be commercial available SST and other solid state devices still need further development The proposed economic alarm processor would send signals changes including the LMPs, congestions, shadow prices etc. to all the market participants, which will allow them to know information at a variety of levels needed to:

- Access the short term transmission needs in the system
- Allow for operators to redispatch generators based on scheduled transactions and real time market needs
- Make the power market more transparent, providing information to all participants
- Assist in making transmission operating decisions optimal for economic efficiency as well as for system reliability.
- Allow market participants to identify trends in LMP, line loading and demand levels in order to make transactions in anticipation of these trends.

5.5 Conclusion

Technology and standards are continuously being developed and drive the product performances and quality. New technologies are entering the power system bringing digital communication systems, electronic devices and systems, upgraded switchgear and non-switching devices.

Future substation will be connected to all stakeholders. It will be able to share data through the standard LAN connection and WAN Ethernet. Further market deregulation is also a key factor to integrating grid control and market operations, which requires fundamental new research to define how this may be used to reduce cost, improve operations, and reduce environmental impacts.

The conclusions regarding power apparatus are:

- A distributed superconducting substation is feasible. HTS substation is expected to come to market in 20 to 30 years.

- Penetration of renewable energy will be increased dramatically, which will affect how substations are equipped to handle the interfacing.

- Superconducting technology will be the backbone of power grid in the next 30 years.

- The use of SST and other solid state devices still needs further development to be commercial available.

Regarding the the secondary equipment, the expectations are as follows: More versatile and integrated functions.

- High-speed communication, automated event analysis, and coordinated automated control.

- Full standardization for easy of interfacing and upgrading

- Close correlation between the state of the physical system and the market.

6. Future Research

Several issues are addressed but not explored in our research. Future work may include:

- Software retrofits in the retrofit part. This effort should figure out the requirements of the software retrofit to satisfy the future needs and requirements;
- Cyber security model, detection and test plan for the new design. This effort should study the cyber security model for the specific proposed designs, the cyber security detection method and test plan for validating and certifying the design;
- Different data communication bus structure comparisons for the new design. This should compare the communication delays, data flow and data transfer reliability under different bus structures;
- Detailed cost-benefit analysis of the future design. This effort needs more detailed information of real operation conditions in the future to better define requirements for the IEAP.

7. Conclusion

Designing the 21st century substation is split into three approaches:

1) *Retrofit design:* This approach is focused on existing substation upgrade. It needs to take into account legacy equipment and the need to have minimal disruption of the continuity of services. The discussion is focused on:
   - Adding new equipments to supplement existing substation as well as paving the way for the future replacement of legacy solution
   - Replacing existing equipment due to performance or age deterioration as well as making it compatible for total replacement
   - Balancing the need for open system design and cyber security demands while expanding the best practices and gradually training personnel for new equipment

2) *New substation design:* This approach is used to design a modern substation using off-the-shelf technology. It may be applied for new substation construction and has a requirement to reduce the substation cut-in time. These features are identified for this strategy:
   - Synchronized sampling technology and multifunction IEDs represent major elements of the new design
   - High-speed communication using serial data highway (IEC61850 concept) is highly recommended
   - Data integration and information extraction as the means for providing best data to different user groups provides multiple benefits

3) *Green field design:* This approach is related to a substation design that may be totally different from the existing philosophy. It is based on anticipated technology development and discovery of fundamentally new design methodologies. The followings are features of this approach:
   - More versatile and integrated functions
   - High-speed communication, automated event analysis, and coordinated (hierarchical) automated control
   - fully standardized for ease of interfacing and upgrading
   - better correlation between the state of the physical system and the market

References

[1] http://www.nist.gov/public_affairs/releases/smartgrid_interoperability.pdf.

[2] D. Atanackovic, D.T. McGillis, F.D. Galiana, "The application of multi-criteria analysis to substation design", IEEE Trans. Power Systems, vol. 13, issue 3, pp: 1172-1178, 1998.

[3] G. Yingna, W. Shishan, and G. Hong, "A new type of dry power transformer based on xlpe cable winding," vol. 3, Sept. 2005, pp. 1771–1774 Vol. 3.

[4] P. Werle, V. Wasserberg, H. Borsi, and E. Gockenbach, "A new protection and monitoring system for dry type transformers based on innovative sensor technologies," 2000, pp. 255–258.

[5] T. Nunn, "A comparison of liquid-filled and dry-type transformer technologies," 2000, pp. 105–112.

[6] N. Hingorani and L. Gyugyi. Understanding FACTS, concepts and technology of flexible AC transmission systems. Dehli: Standard Publishers Distributors, 2001. Print.

[7] M. Noroozian and C.W. Taylor, "Benefits of SVC and STATCOM for Electric Utility Application," Transmission and Distribution Conference and Exposition, vol. 3, pp. 1143-1150, Sep 2003.

[8] C.W. Taylor, Power System Voltage Stability, McFraw-Hill, 1994.

[9] K. R. Posey. "AEP Pioneers New Oil-Containment System." T&D World, http://www.strongwell.com/pdffiles/Magazine%20Articles/T_D_2005_Containment.pdf.

[10] Siemens Control and Monitoring Devices, http://www.automation.siemens.com/mcms/low-voltage/en/industrial-controls/control-devices-monitoring/Pages/default.aspx

[11] ABB list of products, http://www.abb.com/ProductGuide/

[12] Oncque corporation, Vibration sensor, http://www.oncque.com/

[13] Morgan Schaffe TFGA-P200 with GP-100, At-line Dissolved Gas Analysis, http://www.morganschaffer.com/index.php?option=com_content&task=view&id=28&Itemid=67

[14] Siemens TMDS 2000 L Transformer Monitoring, on-line DGA Monitoring, https://w3.energy.siemens.com/CMS/US/US_PRODUCTS/PORTFOLIO/TRANSFORMERS/Pages/TransformerMonitoringDiagnosticSystem.aspx

[15] Ningbo Tech Monitoring device company, http://www.lgom.com.cn/index-e.aspx

[16] Syprotec Hydran(r) 201i Brochure, http://www.ge-energy.com/prod_serv/products/substation_md/en/downloads_en/hydran_201r.pdf

[17] ABB brochure, MOCT-P Optical Current Transformer System, 72.5-800 kV Systems, 50/60 Hz

[18] F. Jenau, "Non Conventional Instrument Transformer – a Modern Solution to Measure Current and Voltage," presented in Mexico, Sep 2007.

[19] M. Kezunovic, T. Popovic, "Developing Future Substation Automation Strategies: Selecting Appropriate IEDs and Developing New Applications," International Energy Journal, Special Issue: Cogeneration, Distributed Generation, Distribution System

and Power Quality, and DSM and Energy Efficiency, Vol. 6, No. 1, Pt. 3, pp 3-151-3-162, June 2005.
[20] Siemens product list, http://www.sea.siemens.com/us/home/Pages/Home.aspx
[21] GE product list, http://www.geindustrial.com/cwc/electrical_homepage.htm
[22] Modular Multifunction Digital Fault Recorder, Reason Technology, http://reason-europe.com/digital-fault-recorder/models-dfr/rpv-310.html
[23] James Propst, Mike Dood, "Case Study of Digital Control Systems for High-Voltage Substations".
[24] M. Kezunovic, H. Taylor, "New Solutions for Substation Sensing, Signal Processing and Decision Making", Hawaii International Conference on System Sciences HICSS-37, Waikoloa Vilage, Hawaii, January 2004.
[25] Hardfiber system instruction Manual, Digital Energy Multilin, http://www.gedigitalenergy.com/products/manuals/hardfiber/GEK-113500B.pdf
[26] M. Kezunovic, M. Knezev, Z. Djekic, " Automated Circuit Breaker Monitoring," PSerc Report #07-38, November 2007.
[27] Recommendation ITU-R BS.561-2, Definitions of radiation in LF, MF and HF broadcasting bands
[28] Gas-Insulated Switchgear, B105 brochure. Areva T&D.
[29] M. Steuer, M. Kuschel and M. Bonnassieux. "High Voltage GIS and GIL – Solution for Limited Space." Siemens, Germany.
[30] D. Helbig and A. Khawaja. "A Techno-Economic Comparison Between GIS & Conventional high Voltage Substations." International Seminar on Compact Substations and Gas-Insulated Switchgear. Jan 2001.
[31] C.J. Jones, W. Degen, J. S Finn, P.L Fletcher, D. Kopejtkova, Z. Lefter, E. Duggan, C. Tschannen, B. Skyberg, T. Yokota, M. Meguro and F. Heil. "GIS – State of the Art 2008." CIGRE. 2008.
[32] Compact Air Insulated Switchgear Solutions with Disconnecting Circuit Breaker – Buyer's and Application Guide. ABB, Sweden.
[33] S. Ward, J. Brien, et-al, " Cyber Security Issues for Protective Relays" IEEE Power Engineering Society General Meeting, pp. 1-8, Tampa, FL, June, 2007
[34] NERC "Reliability Standards: Critical Infrastructure Protection". http://www.nerc.com/~filez/standards/Reliability_Standards.html
[35] K. Fodero, C. Huntley, and D. Whitehead, "Secure, Wide-Area Time Synchronization," PAC World Conference 2010, Dublin, Ireland, June 2010
[36] RuggedCom, "IEEE 1588 Precision Time Synchronization Solution for Electric Utilities".
[37] http://www.ruggedcom.com/pdfs/white_papers/precision_timesync.pdf
[38] J. D. McDonald, "Substation automation: IED integration and availability of information," IEEE Power& Energy Magazine, March/ April 2003
[39] M. Kezunovic, et.al. "Automated monitoring and analysis of circuit breaker operation", IEEE Transaction on Power Systems, Vol. 20, No.3, July, 2005
[40] X. Luo, M. Kezunovic, "An expert system for diagnosis of digital relay operation," 13th Conference on Intelligent Systems Application to Power Systems, Washington DC, USA, November 2005.

[41] M. Kezunovic, T. Popovic, “Integration of data and exchange of information in advanced LAN/Web based DFR systems,” Fault and Disturbance Analysis Conference, Atlanta, Georgia, April 2002
[42] L. Jing, H. Olovsson, J. Fan and R. Thomas. “Small footprint, high performance, Design of An Air Insulated Switchgear Substation Based on New Technology.” ABB Review. 2005.
[43] P. Grant and W. Hassenzahl, “All – Superconducting Substation,” presented at Annual Peer Review, Department of Energy, Jul 1999.
[44] L. Lawrence, C. Cox, J. Hamrick and D. Reed. 2000, Dec. High Temperature Superconductivity: The products and Their Benefits. 2002 Edition [Online]. Available: http://www.superconductivitynewsupdate.com/downloads/ProductsandBenefits2002FinalFinalDec31-2002.PDF.
[45] O. Colin and B. Roger, “Future T&D Technology,” 12th International Power Electronics and Motion Control Conference, pp. 2144-2148, 2006.
[46] J.S. Deliyannides and E.A. Udren, “Design Criteria for an Intergrated Microprocessor-based Substation Protection and Control System,” IEEE Transactions, vol. PAS-101, no. 6, June 1982, pp. 1664-73.
[47] Jonathan W. Stahlhut, Gerald Thomas Heydt and Judith B. Cardell, “Power System “Economic Alarms”,” IEEE Trans. Power Systems, vol. 23, no. 2, pp. 426-433, May 2008.
[48] M. Kezunovic, Y. Guan, "Intelligent Alarm Processing: From Data Intensive to Information Rich," 42th Annual Hawaii International Conference on System Sciences (HICCS 42), Waikoloa Village, Big Island, Hawaii, January 2009.
[49] X. Luo, M. Kezunovic, "Implementing Fuzzy Reasoning Petri-nets for Fault Section Estimation," IEEE Transactions on Power Delivery Vol. 23, No. 2, pp 676-685, April 2008.
[50] Gas-Insulated Switchgear up to 145kV, 40kA, 3150A, Type 8DN8 brochure. Siemens, Germany.
[51] Withdrawable and Disconnecting Circuit breakers for Compact Air-Insulated Switchgear, 72.5 – 420kV. ABB, Sweden. http://www05.abb.com/global/scot/scot245.nsf/veritydisplay/98ea5449e19d7f87c12571860045c98e/$File/Withdrawable%20and%20disconnecting%20circuit%20breakers.en.pdf
[52] C. Reuber, P. Griti, M. Tellarini and M. Heimbach, “eVM1 Medium Voltage Circuit Breaker Combines Interruption, Measuring and Protection Capability,” ABB Review, Jan 2004
[53] R. Christian, G. Paolo and H. Kim, “The Integrated MV Circuit-Breaker – A New Device Comprising Measuring, Protection And Interruption,” 17th International Conference on Electricity Distribution, May 2003
[54] eVM1 Medium Voltage Circuit Breaker Combines Interruption, Measuring and Protection Capability Brochure, ABB
[55] eVM1 – installation and service instructions, ABB. http://www05.abb.com/global/scot/scot235.nsf/veritydisplay/a231ec51e6d08ca3c125764000366792/$File/MA_eVM1(EN)B_1VCD600326-0908.pdf
[56] http://www.ruggedcom.com/applications/wireless/

[57] High Temperature Superconducting Testing Facilities Fact Sheet. Oak Ridge National Laboratory [Online]. Available: http://www.ornl.gov/sci/electricdelivery/pdfs/HTS_FS_08-G00336.pdf
[58] S. Sugimoto, J. Kida, H. Arita, C. Fului, and T. Yamagiwa, "Principle and Characteristics of a Fault Current Limiter with Series Compensation," IEEE Transactions on Power Delivery, vol. 11, no. 2, April 1996.James Northcote-Green,
[59] Robert Wilson, "Control and automation of electrical power distribution systems", New York: Taylor & Francis, 2006, p.52-57.
[60] L. Sanford, "First HTS FCL goes into a US grid," Modern Power Systems Magazine, May 2009.
[61] S. Kalsi, and A. Maloxemoff, "HTS Fault Current Limiter Concept," IEEE Power Engineering Society Meeting, June 2004.
[62] F. Mumford, "Superconducting Fault Current Limiters," IEE Colloquium on Fault Current Limiters – A Look at Tomorrow, pp. 6/1-6/7, June 1995.
[63] Zenergy Power Fault Current Limiter brochure, www.zenergypower.com.
[64] S. Kalsi, D. Madura, R. Howard, G. Snitchler, T. MacDonald, D. Bradshaw, I. Grant and M. Ingram, "Superconducting Dynamic Synchronous Condenser for Improved Grid Voltage Support," IEEE Transmission and Distribution Conference, vol. 2, pp. 742-747, 2003.
[65] S. Kalsi, D. Madura and M. Ross, "Results of On-grid Operation of Superconductor Dynamic Synchronous Condenser," American Superconductor [Online]. Available: http://lme.epfl.ch/webdav/site/lme/users/wetter/private/pdf_divers/pap_cigre/Kalsi.pdf
[66] S. Kalsi, D. Madura, R. Howard, G. Snitchler, T. MacDonald, D. Bradshaw, I. Grant and M. Ingram, "Superconducting Dynamic Synchronous Condenser for Improved Grid Voltage Support," IEEE Transmission and Distribution Conference, vol. 2, pp. 742-747, 2003.
[67] R. Hawsey and S. Morozumu. 2005, Apr. The Energy and Environmental Benefits of Superconducting Power Products. SpringerLink [Online]. Volume 10, no. 2, pp. 279-306. Available: http://www.springerlink.com/content/tl083k6146vtv426/
[68] L. Ye, L.Z. Lin, and K.P. Juengst, "Application Studies of Superconducting Fault Current Limiters in Electric Power Systems," IEEE Transactions on Applied Superconductivity, vol. 12, no. 1, March 2002.
[69] T. Zhao, L. Yang, J. Wang and Huang, A.Q, "270 kVA Solid State Transformer Based on 10 kV SiC Power Devices," IEEE Electric Ship Technologies Symposium, pp. 145-149, 2007.
[70] A. Hefner, "High-Voltage, High-Frequency Devices for Solid State Power Substation and Grid Power Converters," National Institute of Standards and Technologies, Jan 2007 [Online]. Available: http://www.nist.gov/eeel/high_megawatt/upload/Hefner.pdf
[71] Heinemann, L.; Mauthe, G., "The universal power electronics based distribution transformer, an unified approach," Power Electronics Specialists Conference, 2001. PESC. 2001 IEEE 32nd Annual , vol.2, no., pp.504-509 vol.2, 2001.
[72] Yang Wu, Doctoral Dissertation, Texas A&M University, 2007.

Project Publications

[1] Mladen Kezunovic, Yufan Guan, Chenyan Guo, Mohsen Ghavami, "The 21st Century Substation Design: Vision of the Future", IREP 2010, the Bulk Power System Dynamics and Control – VIII, August 1-6, 2010, Buzios, Rio de Janeiro, Brazil

[2] Mladen Kezunovic, Chenyan Guo, Yufan Guan, Mohsen Ghavami, "New concept and solution for monitoring and control system for the 21st century substation," Accepted by POWERCON 2010, Smart Substations and Equipment, October 24-28, Hangzhou, China

Appendix A.1: Existing technologies

1.1 Gas Insulated switchgear modules

Gas Insulated Switchgear (GIS) bay typically consists of one or more modules of circuit breaker, disconnectors, earthing switches, instrument transformers and expansion modules (for example,). The dimensions, configurations and connections of components are distinguished for different voltage levels and bus-bar schemes (double bus-bar scheme (Figure A1.1), one and half breaker scheme or ring bus-bar scheme). Three-phase GIS bays are more favorable than single-phase bays as they allow more compact designs.

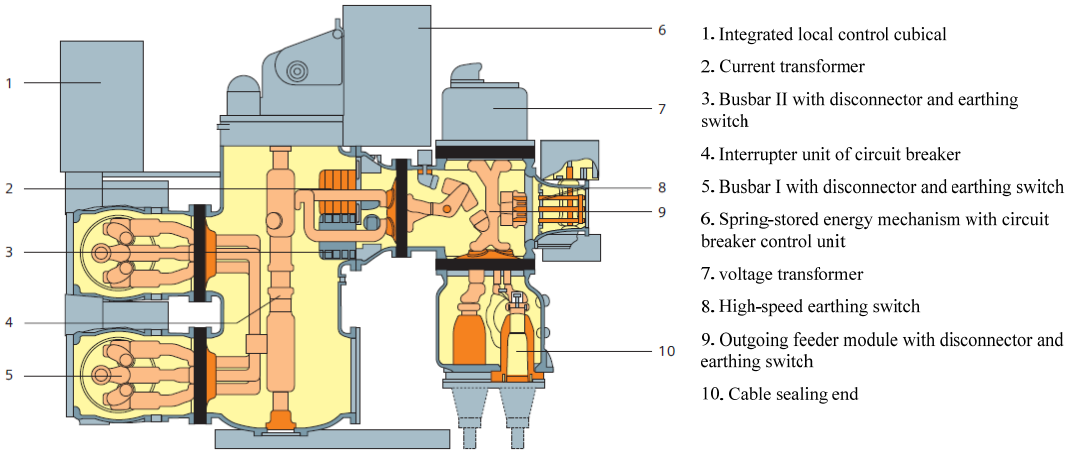

Figure 3.7A1.1 Type 8ND8 of Siemens, 145kV, three-phase, double bus-bar bay [50]

The ecological, environmental and economic requirements led to technological development and accomplishments in materials which in part resulted in more compact, light-weight GIS solutions with less SF6 filled. The use of advanced technologies reduces size and weight of current GIS bay by factor of 6 compared to 27 years ago.

All the switching devices and their combination with associated control (switching control device and gas monitoring), measuring (CT and VT), protective (earthing and disconnecting switches) and regulating equipment are integrated into one bay with the length of 10 meters at 550 kV while the length of conventional Air Insulated Switchgear (AIS) switchgear is 184.5 meters. The main element of GIS is the circuit breaker module, consisting two components: interrupting unit and stored-energy operating mechanism. The circuit breaker module performs fault current interrupting function through the moving of contacts in interrupter unit, operated by spring mechanism. The termination modules are designed in flexible ways so that the bay can be connected to overhead line, transformer, reactor coil or cable (Figure 1.2).

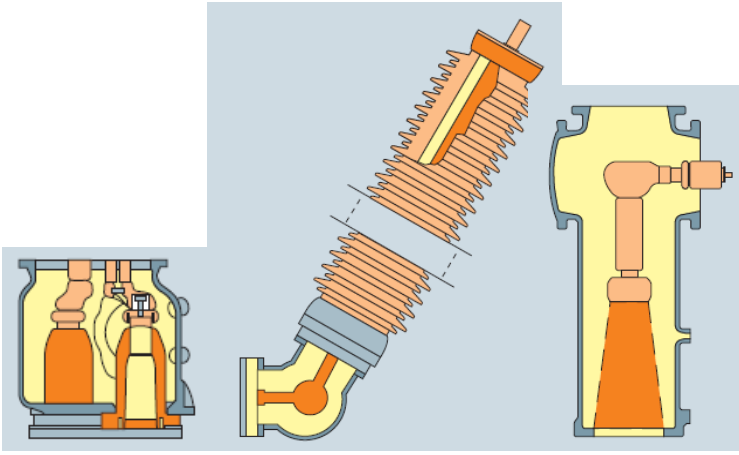

Figure A1.2 Termination modules [50]

The GIS bays are completely sealed and tested, providing a high reliability level. The main enclosure is made of aluminum and welded by the latest welding technique to prevent SF6 leakage. As a result, the switchgear is free from corrosion and lightweight. The compact design and modular system with updated technology reduce 75% SF6 volume and the leakage rate to 0.5% per compartment per year.

1.2 Withdrawable circuit breaker

The withdrawable circuit breaker (WCB) shown in Figure A1.3 is designed to be part of type-tested substation bay [51]. A motorized, spring operating mechanism moves the circuit breaker between connecting and disconnecting position on a trolley. Therefore, the fixed primary contacts are maintenance-free.

The WCB is now commercially available in 72.5 – 300 kV range with two main types, high-built for air-insulated outdoor substations and low-built for indoor substations.

The equipment includes all the necessary functions for a circuit breaker bay and the following devices [51]:

- Circuit breaker with spring operating mechanism
- Trolley with moving mechanism
- Maintenance-free fixed and movable primary contacts

The line entrance modules can consist of:

- Oil-insulated, capacitor voltage transformer
- Grounding switch

- Surge arrester

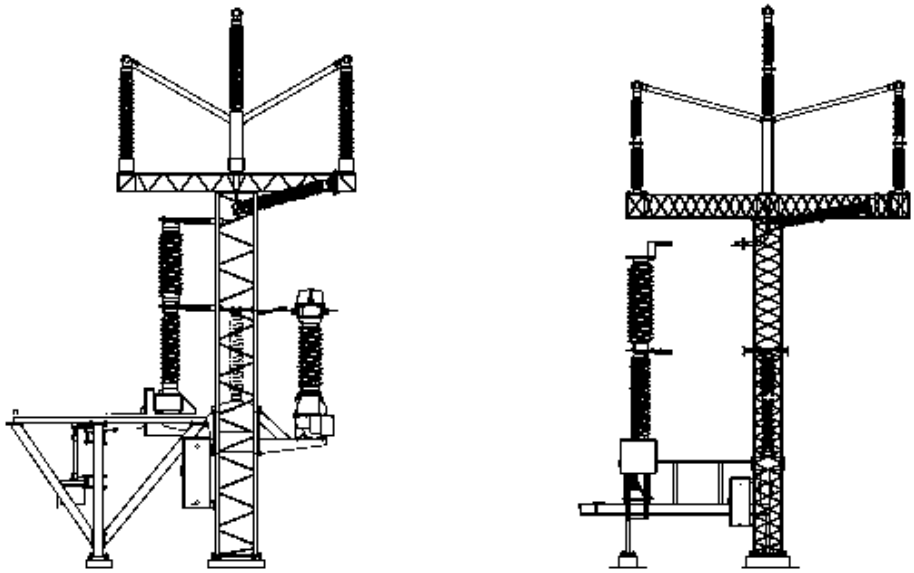

Figure A1.3 Withdrawable circuit breaker [32]

1.3 Combined-disconnecting circuit breaker

The combined disconnecting circuit breaker (DCB) is basically a standard circuit breaker that is type-tested in accordance with disconnector standards. The circuit breaker contacts in open position are thus open disconnector contacts as well. The combined equipment replaces the conventional combination of circuit breaker and separate disconnectors. It permits a simpler and more compact substation layout, with increased availability due to the reduction of maintenance requirements, low failure rate, increased safety and low life cycle cost.

The DCB shown in Figure A1.4 is based on ABB's well known circuit breaker LTB F and HPL B. The basic circuit breaker functions for a DCB are exactly the same as for a CB. The additional feature for a DCB is that it is also approved as a disconnector. That means, when the CB is open, the normal CB contact set fulfills all disconnecting switch (DS) requirements. As the disconnecting function is included in the breaking chamber, there is no visible opening distance.

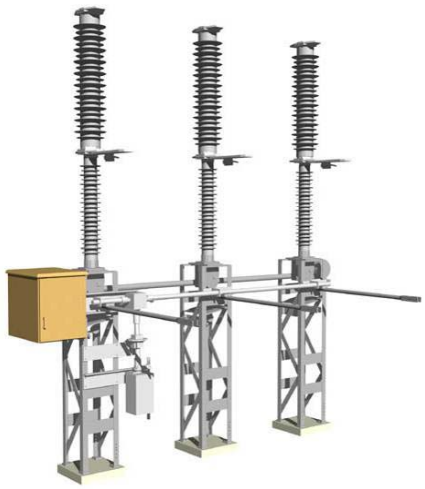

Figure A1.4 disconnecting circuit breaker with one set of moving contacts/poles [32]

The disconnecting function for a Combined DCB is obtained by the circuit breaker contact set. DCB is equipped with a mechanical locking device to keep the CB in open position as shown in Figure A1.5 /disconnected position when it is used as DS. The locking device operates directly on the shaft which moves the CB main contacts. When the mechanical locking is activated, it is impossible to close the breaker. Even if the closing latch of the CB accidentally opens, the CB will stay in open position. The locking device is operated by a motor unit, which allows remote operation. It is also prepared for manual operation but just in emergency situations. This motor is also equipped with auxiliary contacts for interlocking and indication purposes. Operation of the locking device can be considered as a conventional disconnector operation.

Figure A1.5. The disconnecting circuit breaker is locked in open position. The sign indicates blocked [32]

For safety and reliability reasons, there are some special features applied to the construction of DCB.

- Reliability composite insulation across open gap: providing minimal leakage

currents and proven long term properties such as flashover resistan, ageing withstand and low mass.

- The number of sealed joint is minimized to reduce risks of leakage to less than 0.5% [32].
- SF6 volumes are also minimized, 10 times as much as in live-tank breakers [32].
- External grounding switch outside the breaking chamber with visible grounded and ungrounded positions provide maximum safety for operating personnel. This switch also gives the visual indication for operation of DCB, which is shown in Figure A1.6.

Grounding switch and current transformer normally can be erected on the circuit support structure. On the other hand, voltage transformer and surge arresters are mounted on Line Entrance Module. These support systems and the new DCB help decrease the number of foundations (half compared to a conventional setup of apparatus) [32].

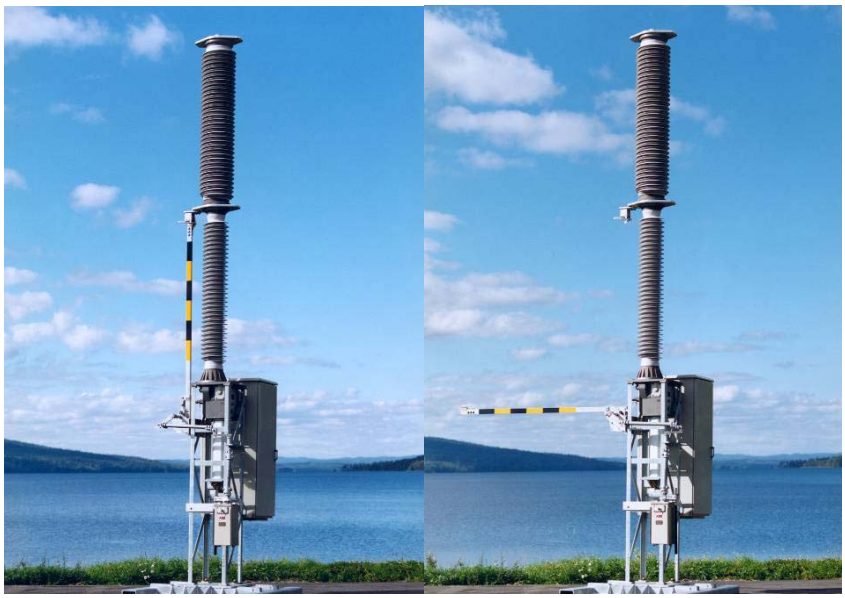

On-Closed/Off-Open and live Off-Open, disconnected and grounded

Figure A1.6. Operating procedure of DCB – visual indication [32]

The most significant improvement that DCB brings is the new possibilities for substation design. When designing a substation, there are a lot of considerations that have to be taken: load, surrounding power network, power losses, reliability and maintenance for apparatus etc. Figure A1.7 shows that the modern SF6 CBs have better maintenance and failure performance than DSs. This fact is shown in the unavailability calculations. During the last 50 years, collected data shows that the failure and maintenance rate for

circuit breakers had improved while the rate stayed at the same level for disconnecting switches.

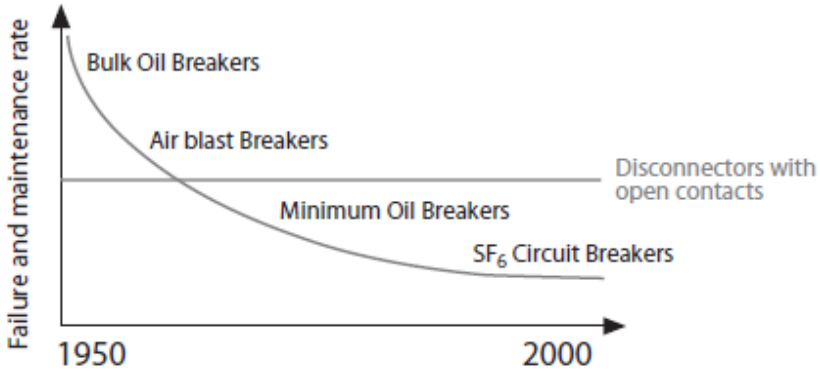

Figure A1.7 Failure and maintenance rate of circuit breaker and disconnectors [32]

That means that the traditional way of building substation with many busbar systems and DSs decreases rather than increases the availability. The consideration of increasing the availability is leading to conclusion to take out all DS out of the substation and only use CBs. However, a disconnection function is still needed for safety reason. The new DCB with the integrated disconnection function is an alternative that can fulfill both of the functions.

DCB is suitable for most of the bus-bar systems shown in Figure A1.8:

- Single bus-bar system: can replace multiple bus-bar systems if some interruptions for maintenance can be allowed.
- Sectionalized single bus-bar system (H connection): increases the availability especially in double transformer solutions.
- Double bus bar/ double breaker system: provides very high availability. .
- Ring bus system
- Breaker and a half system

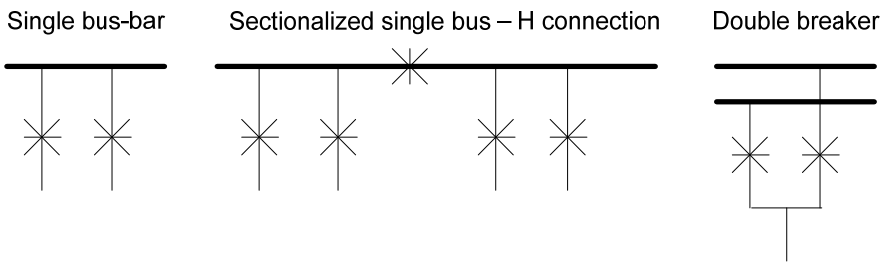

Figure A1.8 Substation solutions with DCBs

The invention of DCB has obviously made a big change in substation design with all the advantages that it has:

- Space saving can be in the range of 20 to 50% less as shown in Figure A1.9.

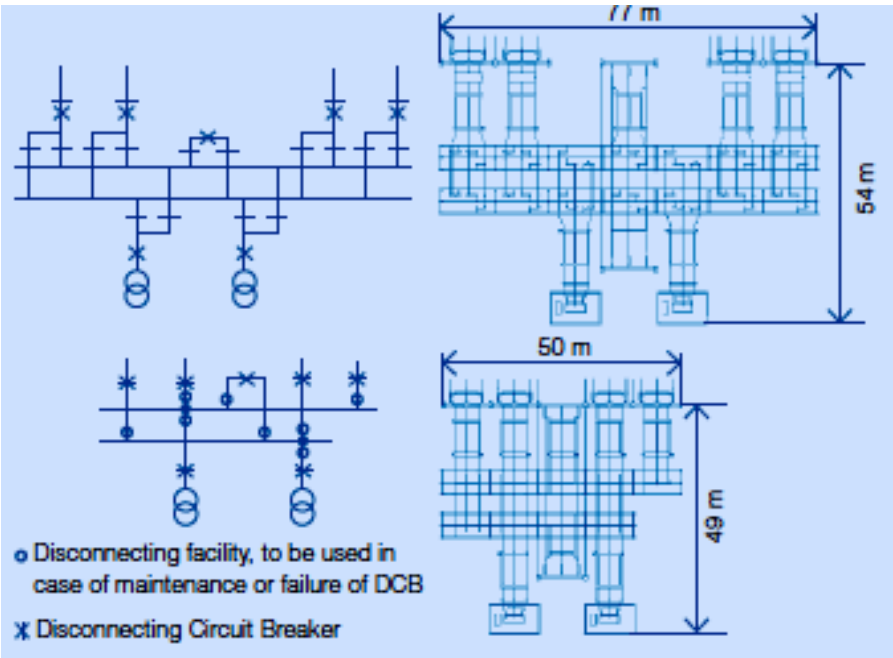

Figure A1.9 Space requirement comparison of 145 kV substations (conventional CBs and disconnectors versus DCB) [42]

- The maintenance interval of DCB is 15 years, like modern CB, but the overall maintenance demand decreases when disconnectors are eliminated.

- With the Combined DCB maintenance interval of 15 years, the use of double busbar systems is not necessary. If a double busbar system is still needed, due to very high requirements for service availability, a good solution is to use a dounle busbar/double breaker system (the very limited DCB maintenance only affects one busbar).

- Using the Combined DCB can save cost in all aspects:
    - Planning (25%)
    - Design (25%)
    - Land acquisition and preparing (30%)
    - Project management and time (25%)
    - Building costs (30%)
    - Maintenance costs (50-60%)
    - Outage costs (50-60%)
    - Scrapping costs
    - The overall Life Cycle Cost (LCC) will be far lower than conventional design
- Environment aspects - the use of natural recourses is minimized. The environmental effects are the lowest.
    - SF6
    - Metallic and plastic material
    - Concrete (less foundations)
    - Electrical energy for service
    - Land area

1.4 Integrated Compact Circuit Breaker

The trend towards more standardized and less complex solutions also takes place in medium voltage systems with the final goal of increasing reliability and reducing installation and operation cost at the same time. ABB introduced integrated compact circuit breaker, named "*eVM1*", a new device capable of measuring, protection and interruption [52].

The new integrated circuit breaker is based on magnetic driven vacuum circuit breaker VM1 of ABB. Rogowski current sensor is added onto the poles. Electronic control device has additional function of protection. The protection functions comprise several overcurrent, earth fault current and motor protection schemes [53].

Comparing to conventional circuit breaker in medium voltage metal-clad switchgear, eVM1 has some innovations in configuration that make the new circuit breaker a suitable device, meeting the new design criteria.

- Magnetic actuator for operation of interrupter
- Rogowski current sensor fitted on the pole contact arms
- Compact vacuum interrupter
- Electronic controller with sensors supervises circuit breaker function and controls its functions.

Thus the inherent advantages of integrated circuit breaker [53]:

- Synchronized Sampling, fewer defects, unnecessary interfaces (I/O device and wiring) are eliminated.
- Reduced cabling.
- Complete in-factory tested system including all secondary equipment and functionality for a complete switchgear panel.
- Safety and reliability are increased since the complete breaker is fully tested in factory.
- More rapid installation and putting it into service in substation.

The main components of integrated circuit breaker are described in Figure1.10.

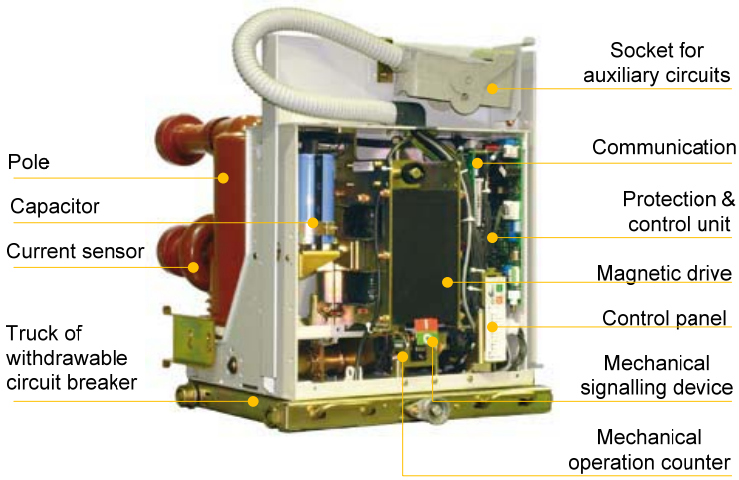

Figure A1.10 Main components of integrated circuit breaker eVM1 of ABB [54]

Magnetic actuator

Utilizing magnetic drive allows eVM1 to have a very simple and maintenance-free mechanical structure. It requires fewer parts and there are no parts that are subject to wear or need lubricant to operate. Therefore, reliability rate is increased since the risk of failure is minimized. The magnetic actuator provides high force applied on a vacuum interrupter to lock the breaker in close position with no difficulty. When the breaker opens, a low force is required. No energy is need for the magnetic actuator to hold any position. A major benefit of magnetic drive is its expected life time which can be up to 100,000 close-open operations.

Vacuum interrupters and embedded poles

Vacuum interrupter can be considered one of the key technologies of ABB in new medium voltage circuit breaker. It does not require any maintenance because there is no ionizable gas. The vacuum environment guarantees the separation of contacts taking place in a few milliseconds before current passes through natural zero crossing. Furthermore, it prevents equipment from oxidation and contamination. The life time of vacuum interrupters is more than 30 years, up to 30,000 close-open operations.

The vacuum interrupter is embedded in the epoxy resin pole. This epoxy resin protects interrupter from exposure to pollution, deposit of dust and humidity. This protection can only be achieved by increasing the length of outer ceramic envelope of conventional interrupters, enlarging the design. Interrupter contacts in quenching chamber are activated by a single magnetic drive which is controlled by position sensors and an electronic module. The capacitors provide energy for circuit breaker operation. This configuration ensures that eVM1 circuit breakers are sturdy, high reliability, long life and maintenance-free.

Rogowski current sensors

Rogowski current sensors are the key factor in integrated and compact design of eVM1 circuit breaker. Rogowski sensor consists of a helical coil wound around a non-iron core (air core). Thanks to this air core, the sensor has low inductance and fast response to changing current. Thus, comparing to traditional iron-core current transformer, typically used in medium voltage switchgear, Rogowski coil has many advantages.

- Exhibiting good linearity when measuring high current, high accuracy in measuring phase angle and electro-magnetic compatibility.

- Having a wide bandwidth: it can measure current from few amps to tens of kiloamps. The measuring range is determined by the linear range of eVM1's measuring module.

- Being used for isolated current measurement

- Low losses

- Smaller size and low weight
- Good life cycle
- Enhanced safety
- High sensitivity
- Accuracy class: 1%

The fact that output is proportional to the time derivative of the current and has to be integrated is a drawback of Rogowski coil. This is a challenging to analog integration. However, with the modern protection relays and numerical integration, this problem has been solved.

Figure A1.11 Conventional current transformer (left) and Rogowski coil current sensor (right) [55]

Control electronics

The electronic control module (main processing module and binary I/O module) performs all the circuit breaker functions (control of the panel, current measuring, protection, monitoring, signaling and system auto-diagnosis), receives and sends command and control signal through 16 inputs and 16 outputs of binary I/O module. The main processing module has the functions of charging the capacitors, acquiring analog current sensor signal and converting it to digital. The RS485 port is incorporated for communication with configuration software and the HMI.

The operation of eVM1 is similar to traditional circuit breaker. It can be controlled locally by key integrated in the interface in the low voltage compartment door or by a laptop computer with configuration software and proper cable. The operation state of circuit breaker can also be seen on the inspection window on its compartment. Architecture of electronic control and information management module of eVM1 are clearly displayed in Figure A1.12.

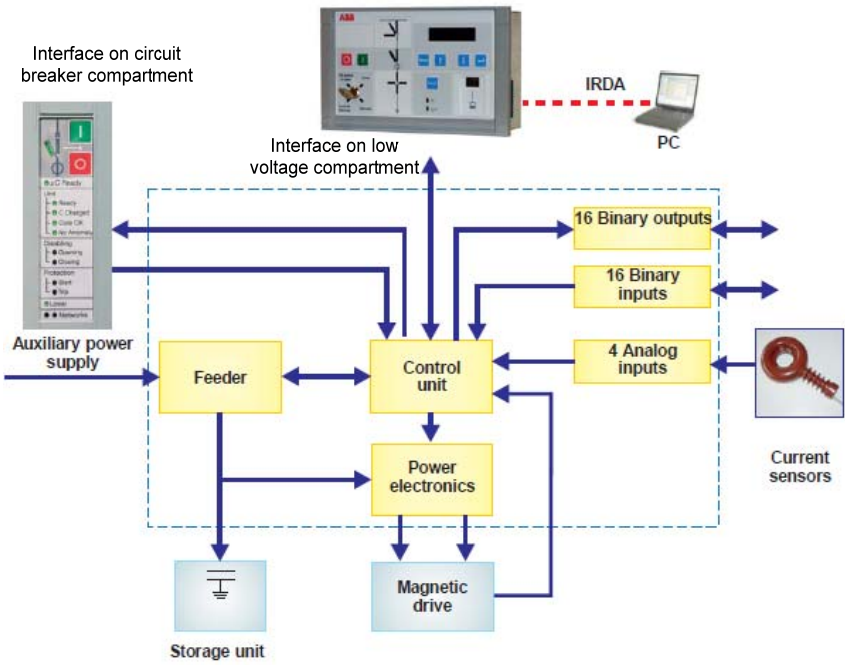

Figure A1.12 Control electronics and information management architecture of eVM1 [54]

1.5 Synchronized Sampling

The utility industry uses GPS for providing a reference time signal, which in turn can be received at each substation through GPS receiver. There are two purposes for using this technology:

- Synchronization of the sampling clock on the input data acquisition systems in IEDs.
- Time-stamping of the data acquired by IEDs.

The implementation is shown in Figure A1.13.

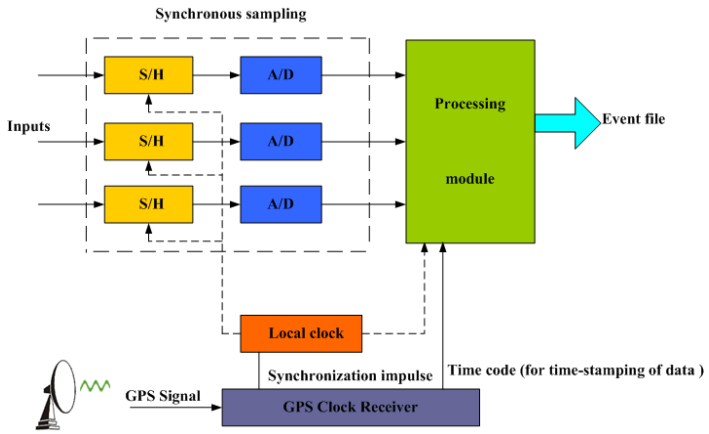

Figure A1.13 Synchronized sampling implementation

1.6 Optical current and voltage sensors

Figure A1.14 shows the new optical current and voltage sensors. The main advantages for optical sensors are the wide frequency bandwidth, wide dynamic range and high accuracy. Furthermore, these new sensors allow monitoring and control to be implemented with two important application features:

- Single sensor may serve different types of IEDs
- Single sensor may serve large number of IEDs via process bus.

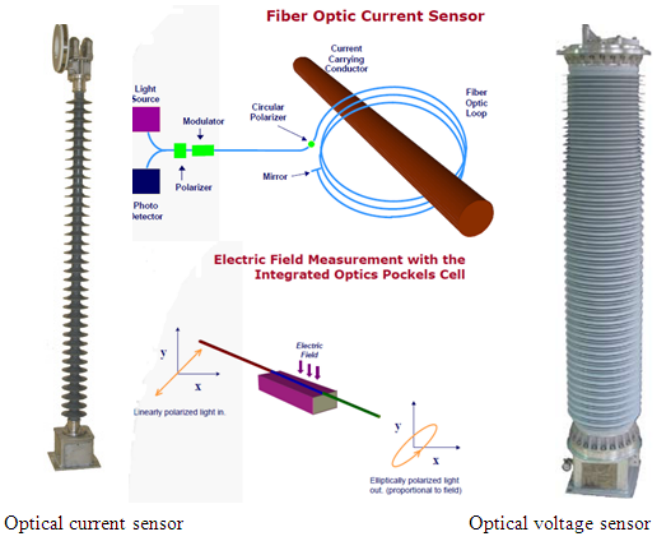

Figure A1.14 Optical current and voltage sensor

Those sensors also need GPS synchronization of the output samples being placed on the process bus.

1.7 Communication media

Four major communication media options in modern power system grid are: microwave radio, spread spectrum wireless radio, fiber optic cable and high speed process buse.

In the new substation design, a hybrid system that integrates fiber optic cables with high speed process bus is adopted. Figure A1.15 shows diagram of optical fiber structure. There are two data transmission options on the optical fiber: single mode and multimode mode. Single mode has one stream of laser-generated light and is used for long distance up to 3000 meters. Multimode mode has multiple streams of LED-generated light and is used for short distance. The benefits of optical fiber are: supports long distance telecommunication, greater capacity, provides smaller size, lighter weight, and electromagnetic isolation.

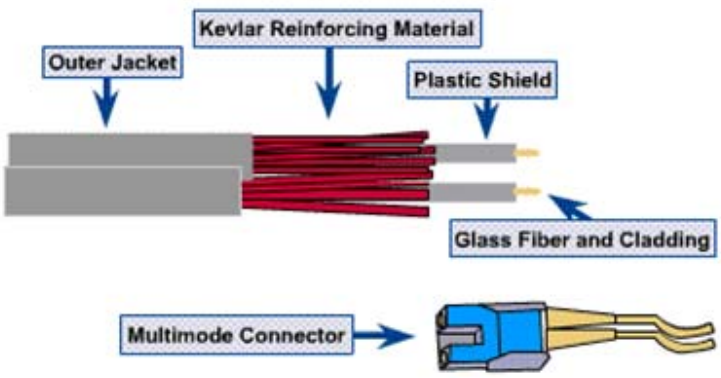

Figure A1.15 Optical fiber structure

1.8 Multifunctional IEDs

Figure A1.16 shows the latest multifunctional IEDs from different vendors. Multifunctional IEDs are devices which integrated more functionality into fewer devices, resulting in simpler designs with reduced wiring. The most important advantages of IEDs are communicating through computer networks and hosting multiple functions, so more information could be made available remotely. PMU for Synchronous phasor measurements is widely used for wide area power system monitoring and control, improving state estimation and exposing system performance.

Figure A1.16 Multifunctional IEDs

1.9 Wireless network

Figure A1.17 shows wireless network implementation. Video surveillance is installed to monitoring the condition around the substation which also improves the physical security. Temperature and motion detection sensors are used to monitor the conditions of transformer and circuit breaker. The entire signal set from the switchyard will be transmited to the control house through the wireless network. The harden switches in the control house are used to control the data stream and the security of the wireless network.

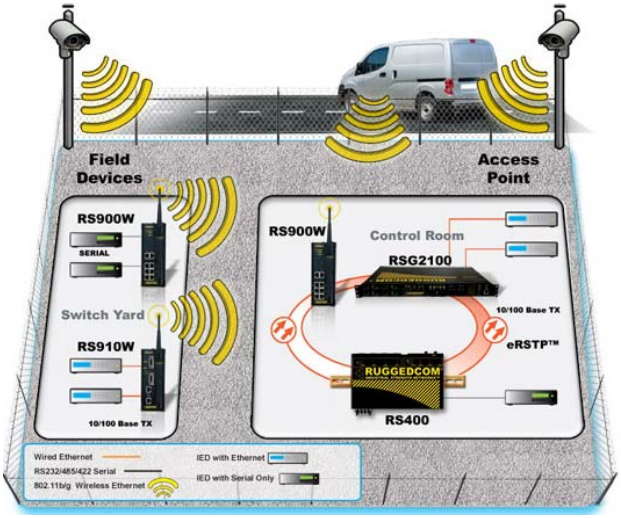

Figure A1.17 Wireless network implementation [56]

1.10 Ethernet switch

Ethernet switch which is shown in Figure A1.18 benefits the process bus. Ethernet switch process the message priority to realize the GOOSE scheme between relays and secure access.

Figure A1.18 Ethernet switch

Appendix A.2: Novel research ideas and future technologies

2.1 Superconducting technology

The discovery of materials that can transmit large amount of electric current with no resistance at certain temperature, called superconductor, has open up a new horizon for power grid in the 21st century. Experiments with superconducting materials have been conducted since the early 1900s with critical results being obtained, which brought several Nobel prizes to the involved scientists. Among those, the most significant is the discovery of High-Temperature Superconductor (HTS), the main material used in superconducting devices today.

Being aware of the benefits of superconducting technology, research laboratories all over the world are conducting and inventing superconducting devices. DOE laboratories (Oak Ridge National Laboratory) cooperate with industry companies and universities taking efforts in developing superconducting power apparatus [57]:

- HTS cables with Southwire company and utility hosts.
- HTS Fault Current Limiter with SuperPower team.
- HTS Transformer with Waukesha Electric Systems.
- Cryogenic dielectric R&D (nano-dielectric materials).

Superconducting Fault Current Limiter

Fault current limiters (FCLs) are used as an alternative solution to lower the fault current levels so that upgrading the existing equipment is alleviated. The introduction of High Temperature Superconductor (HTS) in 1986 [58] gave rise to a superconducting FCL (SFCL) which can work at much higher temperature. SFCL is considered as one of the innovative devices of FACTS in electric power systems. The application of SFCL not only decreases the stress on upgrading devices but also increases the system stability and power quality. SFCL meets the requirements for a current limiting device such as faster operation and keeps the fault current lower than in the existing switchgear [58]. SFCL has been used in distribution and transmission voltage level. The first HTS Fault Current Limiter was in operation in March 2009 in Southern California grid, leading to a new horizon for smart grid devices.

a. What is SFCL?

A superconducting fault current limiter utilizes the characteristic of High Temperature Superconductors (HTS) to instantaneously limit or reduce unexpected electrical surges that may occur during fault or lightning events on distribution and transmission networks.

b. How does SFCL work?

Superconducting fault-current limiters normally operate as "invisible" components in the electrical system since they add no impedance to the circuit and no voltage drop, unlike

reactors or high-impedance transformers. If a fault occurs, causing the fault current larger than the superconducting critical current, Ic, SFCLs rapidly switch from superconducting state to a normal resistive state and current limiting occurs (this process is called a "quench"). The SFCL can be used to decrease up to 5 times of fault current in distribution and transmission networks.

FCLs make use of superconducting materials which can instantaneously limit the fault current within milliseconds. Due to the loss of superconductivity, SFCLs insert impedance to the circuit, reducing fault current to the levels that the existing circuit breaker can handle. In normal operation, SFCLs produce no energy loss and voltage drop in the circuit, thus increasing the system stability and power quality. However, a circuit breaker is still connected in series with SFCL for fault protection as it has no interrupting function.

c. Benefit of using SFCL

Annually, the utilities have to pay millions of dollars for maintenance and new circuit breaker to protect the grid. The application of FCL has saved billions of dollars for utilities as it reduces the cost of new circuit breaker and fuses. FCL with all the benefits below shows that it is an evitable device in the system [59]-[60].

- Avoids equipment damage
- Protects and extend the life of transformers and other equipment.
- Reduces equipment replacement need (higher breaker rating…)
- Eliminates wide-area blackouts, faster recovery
- Uses lower fault rated equipment, avoids series reactors
- Avoids split buses, opening bus-tie breakers
- Provides higher system reliability when bus tie breakers are closed
- Uses lower impedance transformers
- Reduces voltage dip on adjacent feeders
- Enhances grid stability

The SFCL design requires that the limited fault current be between three and five times the steady-state current rating [61]. If lower than three times, the SFCL is difficult to design to differentiate a fault current from an overload current from a spike due to an inductance motor starting. If greater than 5 times, excessive heating will occur. The installation of SFCL in the network will also impact on the protection scheme

The first SFCL in the USA grid was installed in March 2009 in South California grid by the Southern California Edision [59]. The Zenergy's proprietary HTS fault current limiter

is design to help prevent blackouts in electricity transmission system. It is now activated and operating in real-time to provide the protection to the power grid. This is the beginning of a larger program of investigation into the value of such devices for support of the grid nationwide. The specification of a 15kV HTS FCL of Zenergy is displayed in Table A2.1.

Table A2.1 Specification of 15kV HTS FCL [62]

Specifications	Value	Notes
Line voltage	15 kV	Maximum Line-line
Line current	2 kA	Maximum 3-phase
Prospective fault current	50 kA	rms symmetric
Fault current deduction	30-40%	
Let-through current	5-10 kA	
Fault duration	60 cycles	
Recovery time	Immediate	
Number of operation	Unlimited	
Dimensions	8'x12'x9'	Maximum
Weight	40,000 lb	Maximum

The estimated cost of electrical blackouts to commercial business in the US is over US$100 billion per year. That's why there are ongoing investment in modernization of the existing grid and adoption of a number of devices based on new technologies, FCL being prominent among them. According to U.S. Department of Energy, they provided about $30 million for designing and testing FCL in 2007.

There are many manufacturers developing FCL all over the world: American Superconductor, California Edison Inc. (Rosemead, CA), EPRI, Nexans (France), Nissan Electric Co. Ltd. (Kyoto, Japan), Siemens AG (German)

Superconducting Synchronous Condenser

Although reactive power does not produce useful energy, its role in the grid is to maintain voltage level to transmit real power. The best place to produce and inject reactive power to the grid is close to load. Superconducting Synchronous Condenser (SSC) is introduced to provide peak and dynamic reactive compensation.

HTS Synchronous Condenser, called SuperVar®, was developed by American Superconductor Corp. It eliminates most of the problems that the conventional synchronous and electronics solutions have. SSC, a rotating machine, uses high-temperature superconductor for rotor winding and shares the same stator and frame structures with conventional synchronous condensers (Figure A2.1). Operating at a constant cryogenic temperature, the need to rewind due to thermal cycling of field copper coil is reduced significantly. Thus, the maintenance cost is very low.

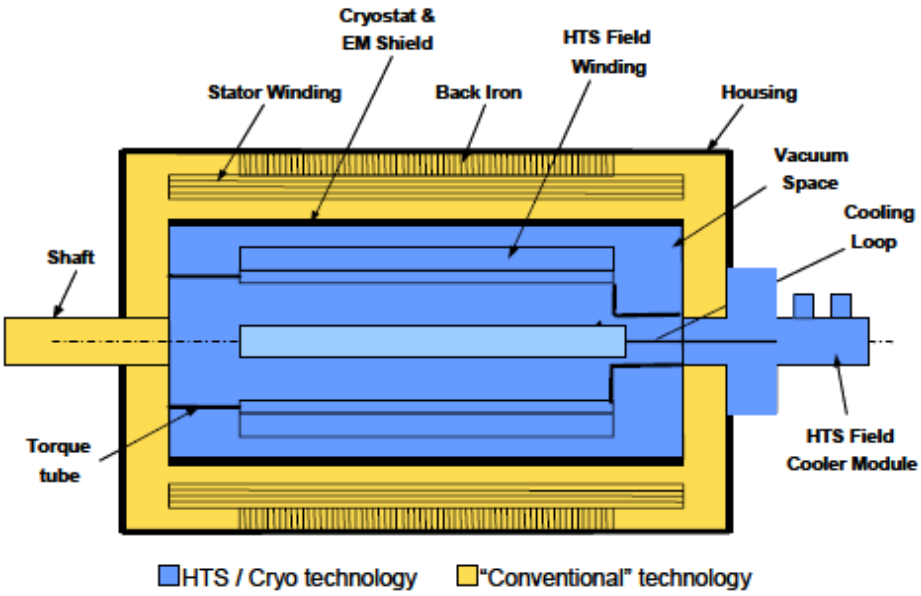

Figure A2.1 Diagram of a superconducting synchronous condenser [63]

Like other superconducting devices, SSC uses a high-reliable Giffort-McMahon (GM) cooling system to keep the temperature at 30 K. It contains a typical cryocooler and a compressor which could be located far away from the machine if needed (Figure A2.2).

SuperVar using HTS wire is a much more efficient system than the conventional synchronous condenser:

- Lower standby losses: SSC uses less than half of the energy of conventional synchronous condenser. Resistive losses of HTS wire are negligible.
- Higher efficiency: 98.8%, double the efficiency of conventional condenser
- Higher output: SuperVar can provide up to 8 times its rated capacity for a short time.
- Lower cost of design: simplified solution.
- Higher reliability and better operation characteristic: to change from no-load to full-load conditions, conventional machine's field current must be increased by factor of three, thus resistive losses are increased by nine. This causes heating to the winding, leading to premature failure, unbalanced expansion of field coil and vibration excursion which limit the operating capability. For HTS synchronous machines, the field current changes are small **Error! Reference source not found.**. As a result, the resistive losses are low as well as no expansion happens to the winding. The lifetime of SSC is extended.

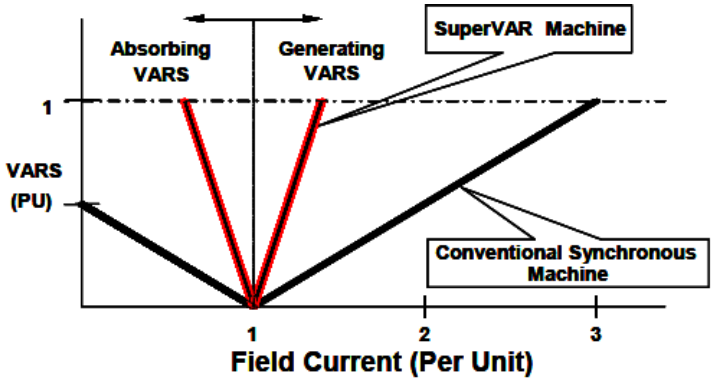

Figure A2.2 Comparison of V-I characteristics of SuperVar Machine and Conventional Synchronous Machine [64]

Additionally, comparing to FACTS devices, SSCs have the same loss rate 1.2% of the rating but SSCs deliver no harmonics and their installation is much simpler and smaller footprint [65].

An important feature of SSC is the flexibility in operation and recovery during fault events. During normal operation, there is no current delivered by stator and the resistance is 0.5 pu [65]. To start SSC directly on the grid, it takes 12 seconds and draws 5.7 pu current from the grid.

When fault happens, the machine is slowed down until the fault is gone. It takes less than a second for SSC to recover after fault is cleared. To recover lost speed, it draws 5 pu current from the grid to return to pre-fault status. In the worst case when fault cannot be cleared, field excitation should be removed to protect the machine, otherwise, it will keep injecting 4 pu current in to the fault current [64].

Benefits of SSC can be summarized as follows:

- Transient dynamic voltage support and stability control (capability of lagging and leading mode)
- Dynamic power factor correction
- Steady state voltage regulation
- Low losses
- Low maintenance cost and high reliability
- No harmonics
- Simple installation, easily transportable
- Low operating energy consumption

Superconducting transformer

Superconducting transformers utilize HTS wire or tape for windings instead of copper wire like in conventional transformers. The current power transformers are very simple

and reliable. They have high efficiency, above 99%, and play a central role in electric systems. However, superconducting transformers offer several advantages in economic, operational and environmental aspects.

Advantages

Superconducting transformers or HTS transformer not only improve some features of conventional ones but also include entirely new functionality which is important to utilities [44], [66]-[67].

- Current limiting ability
- Ability to sustain overload without increased loss of transformation life
- Half size and weight, reducing required land area for new substation and increasing existing substation capacity as a result.
- Elimination of oil spill and risk of fire, reduction in environmental impact as dielectric oil is replaced by low cost, environmentally safe liquid nitrogen, bringing the transformer closer to load center with lower insurance cost.
- Ease of load tap changing implementation
- Through-fault capability

Compared to conventional transformer, superconducting transformer does not require more maintenance personnel. Additional protection of the equipment is compatible with existing protection. The HTS transformer complies with the green-field substation's criteria in a number of ways.

2.2 Solid State Technology

Solid state transformer

Solid state transformer (STT) has the same function of step-up or step-down of voltage levels as conventional iron-core transformer does. The new transformer does not face the undesired properties of the conventional one such as bulky size, regular maintenance and power quality susceptibility. High-frequency converter, the heart of solid state transformer is now feasible due to SiC materials.

A typical SST consists of an AC/DC rectifier, a DC/DC converter, a high frequency (HF) transformer and a DC/AC inverter. Figure A2.3 presents a basic configuration of a 270 kVA SST. With this configuration, SST has several advantages that make it a promising alternative to conventional transformer.

- Enables the unity power factor (20% increase in power) as the AC/DC rectifier stage acts as power factor correction device.
- Not being affected by voltage sag or swell as there's a DC link.

- Capability to maintain output power for a few cycles in case of power outage due to energy stored in DC link capacitor.
- Potential removal of circuit breaker since it operates as a circuit breaker or a current limiter through control of DC/AC converter.
- Fast fault detection and protection.

Figure A2.3 Basic configuration of SST [67]

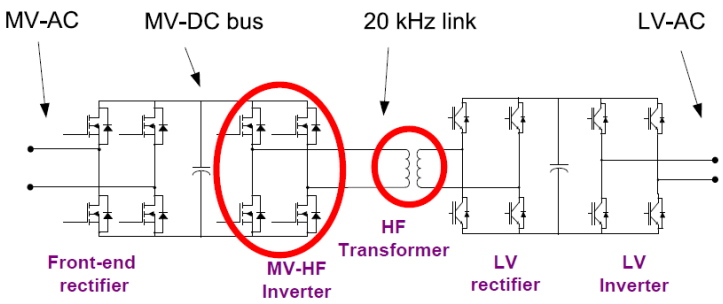

Figure A2.4 Single phase module [68]

Several topologies of SST have been proposed with different configuration of components but they employ the same voltage transformer strategy discussed above (Figure A2.5). The high-voltage high-frequency AC/DC rectifier converts 13.8 kV, 60 Hz AC to 24 kV, 20 kHz DC bus. The HF DC/DC then convert 24kV to 750V DC bus and a voltage source inverter inverts 750V DC to 480V, 60 Hz AC.

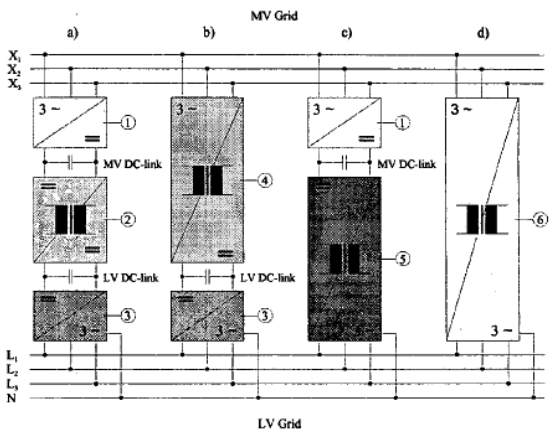

Figure A2.5 Different design approaches of SST

Different research efforts are being conducted to bring SST into substation. In a SST project of National Institute of Standards and Technology, the goal of Phase III is the prototype of a 2.7 MVA SST, detailed in Table A2.2.

Table A2.2 Comparison of conventional and SST [69]

Low frequency conventional transformer (analog)	Estimated SiC-based Solid State Power Substation (digital)
	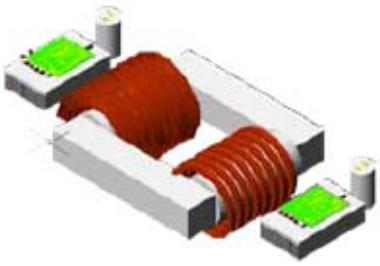
• 2.7 MVA • 13.8kV/450V (Δ/Y) 60 Hz • 6 tons/each • 10 m^3/each • Fixed, single output	• 2.7 MVA • 13.8kV/465V (Δ/Y) 20 Hz • 1.7 tons/each • 2.7 m^3/each • Multiple taps/outputs

2.3 Advanced Alarm Processor using two-level processing structure

Reference [71] has proposed an alarm processor approach that includes two modules, one at the substation and one at the central level respectively. A two-level processing structure is introduced to effectively use the enormous amount of data available at the substation automation system (SAS) level. Not all that data are directly transmitted to the control center, instead, local processing at the computers in substations is carried out and the results of such analysis are transmitted to assist the energy management system (EMS) level alarm processor. Figure A2.6 shows the overall software structure.

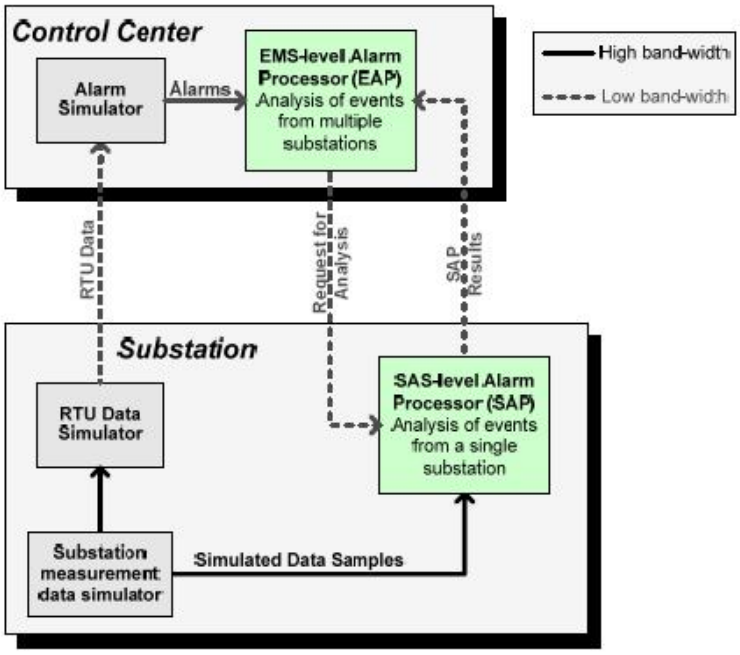

Figure A2.6 Two-level processing structure

This design has several benefits:

1) The SAS-level alarm processor uses measurements that are only available within the substation and therefore is more capable of recognizing the nature of disturbance in the substation.

2) The EMS-level alarm processor relies largely on the results of SAS level alarm processor. Since most of the analysis work has been done separately at the substation level, the EMS-level alarm processor is efficient.

Due to the two-level structure of the proposed alarm processor, more complicated analysis functions can be finished in reasonable time. As a result, the dispatchers are prompted with more useful and distilled information, including suggested actions to be taken.

2.4 Intelligent Economic Alarm Processor (IEAP)

The concept in Intelligent Economic Alarm Processor is to augment conventional electrical alarms and to bring to the attention of transmission system operators and market participants changes in system operating and economic conditions in an electric power system. An alarm, in general, is a mechanism by which a large amount of data is processed in a way that discards the detailed information but retains information to which the operator must attend [47]. The basic concept is that public information is attainable in providing market participants and operators with alarms based on economic information and trends. Figure A2.7 shows an overview of the proposed IEAP.

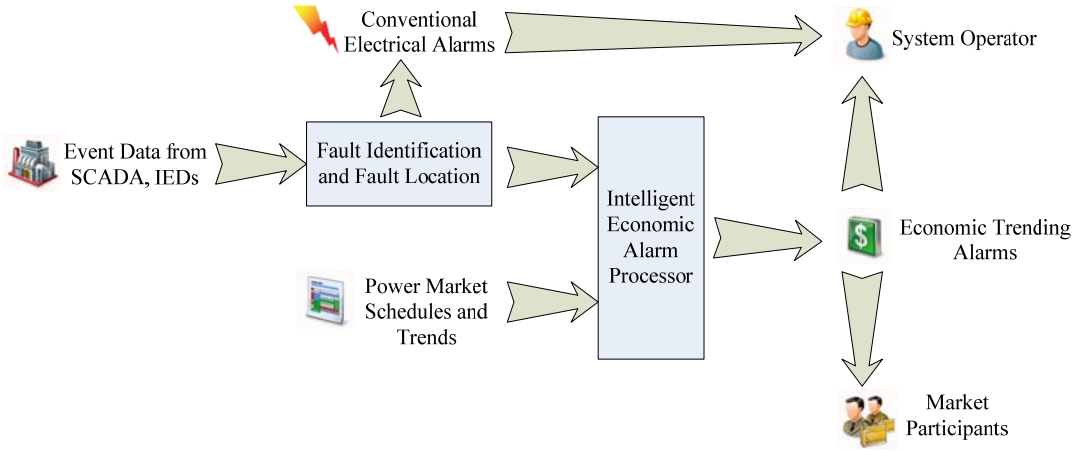

Figure A2.7 Overview of Intelligent Economic Alarm Processor

a) Conventional Alarm Processing

The conventional alarm processing function will be divided into two modules, as discussed below:

Substation-level Alarm Processor (SAP)

The main analysis work will be done at the substation level. The SAP draws conclusions about what happened solely based on raw data from a single substation. This function is expected to be installed in the substation where local area network (LAN) is available, therefore large amount of IED measurement data (up to 100Mbps) can be retrieved in real-time.

The aim of the SAP is to dig out more information from the detailed substation measurements. Since high-sampling-rate data are available from IEDs, the SAP is able to draw conclusions more accurately than the conventional alarm processor at the EMS level, where those detailed data samples are not available.

EMS-level Alarm Processor (EAP)

The purpose of the EAP is to analyze events from multiple substations and try to conclude what has happened during a system-wide disturbance that involves different substations. The EAP obtains inputs from multiple substations. Two types of inputs are obtained: the alarms from the alarm simulator and the SAS-level alarm processing (SAP) results. Data from different sources are compared and the timestamps are synchronized when there are corresponding reports for the same event with slightly different timestamps.

The EAP searches through the alarms for alarms in the above categories. Once any of these alarms are spotted, the EAP will decide what substations are suspicious to have a fault. It then sends a command to the SAS-level alarm processors in those suspicious substations, requesting the SAS-level alarm processing results. The intra-substation data are processed by the SAP separately in each substation, and the results are pulled by the EAP to form complete analysis results for a multi-substation scenario.

b) Economic Alarm Processor

As shown in Figure A2.7, the Economic Alarm Processor employs not only electric alarms and events, but also utilizes the present state of a power system and trending information to produce alarms which indicate possible economic impact of events and trends. The trending information would include LMP, line loading and demand levels. As intermittent resources achieve higher penetration levels, this could also include wind and solar generation forecasts. The concept is to use analysis software to calculate the alarms.

IEAP model establishment

A Fuzzy-Reasoning Petri-Nets alarm diagnosis model has been proposed in our previous work [48]-[49]. This solution

- Possesses the strength of both Expert System and Fuzzy Logic as well as parallel information processing
- Provides the optimal design of structure of FRPN diagnosis model
- Gives an effective matrix reasoning execution algorithm

A . Definition

A Fuzzy Reasoning Petri-net (FRPN) can be defined as an 8-tuple [46]:

$$(P, R, I, O, H, \theta, \gamma, C)$$

where

1) $P = \{p_1, p_2, \cdots, p_n\}$ is a finite set of places or called propositions.

2) $R = \{r_1, r_2, \cdots, r_m\}$ is a finite set of transitions or called rules.

3) $I : P \times R \to \{0,1\}$ is an $n \times m$ input matrix defining the directed arcs from propositions to rules. $I(p_i, r_j) = 1$, if there is a directed arc from p_i to r_j, and $I(p_i, r_j) = 0$, if there is no directed arcs from p_i to r_j, for $i = 1, 2, \cdots n,$ and $j = 1, 2, \cdots, m$.

4) $O : P \times R \to \{0,1\}$ is an $n \times m$ output matrix defining the directed arcs from rules to propositions. $O(p_i, r_j) = 1$, if there is a directed arc from r_j to p_i, and $O(p_i, r_j) = 0$, if there is no directed arcs from r_j r_i to p_i, for $i = 1, 2, \cdots n,$ and $j = 1, 2, \cdots, m$.

5) $H : P \times R \to \{0,1\}$ is an $n \times m$ matrix defining the complementary arcs from propositions to rules. $H(p_i, r_j) = 1$, if there is a complementary arc from p_i to r_j, and $H(p_i, r_j) = 0$, if there is no directed arcs from p_i to r_j, for $i = 1, 2, \cdots n,$ and $j = 1, 2, \cdots, m$.

6) θ is a true degree vector. $\theta = (\theta_1, \theta_2, \cdots \theta_n)^T$, where $\theta \in [0,1]$ means the truth degree of p_i, $i = 1, 2, \cdots n$. The initial truth degree vector is denoted by θ^0.

7) $\gamma : P \to \{0,1\}$ is a marking vector. $\gamma = (\gamma_1, \gamma_2, \cdots \gamma_n)^T$. $\gamma_i = 1$, if there is a token in p_i, and $\gamma_i = 0$, if p_i is not marked. An initial marking is denoted by γ^0.

8) $C = diag\{c_1, c_2, \cdots c_m\}$. c_i is the confidence of r_i, $j = 1, 2, \cdots, m$. The 5-tuple (P, R, I, O, H) is the basic FRPN structure that defines a directed graph. The updates of the truth degree vector θ through execution of a set of rules describe the dynamic reasoning process of the modeled system. If the truth degree of a proposition is known at a certain reasoning step, a token is assigned to the corresponding proposition, which is associated with the value between 0 and 1. The token is represented by a dot. When a proposition p_i has no token, which means that the truth degree is unknown at that step, $\theta_i = 0$.

B. Execution Rules

In order to describe the execution rules of a FRPN, the following operators are used:

1) $\oplus$: A $\oplus$ B=D, where A, B, and D are all $m \times n-$dimensional matrices, such that $d_{ij} = \max\{a_{ij}, b_{ij}\}$.

2) $\oplus$: A $\oplus$ B=D, where A, B, and D are all $(m \times p)$, $(p \times n)$, $(m \times n)$ $-$dimensional matrices, such that $d_{ij} = \max_{1 \le k \le p}\{a_{ij} \cdot b_{ij}\}$.

The execution rules include enabling and firing rules.

1) A rule $r_j \in R$ is enabled if and only if p_i is marked, or $\gamma_i = 1$, $\forall p_i \in$ {input propositions of r_j}.

2) Enabled at marking γ, r_j firing results in a new γ'.

$$\gamma'(p) = \gamma(p) \oplus O(p, r_j), \qquad \forall p \in P$$

The truth degree vector changes from θ to θ'

$$\theta'(p) = \theta(p) \oplus c_j \cdot \rho_j \cdot O(p, r_j), \qquad \forall p_i \in P$$

where

$$\rho_j = \min_{p_i \in \square r_i}\{x_i \mid x_i = \theta_i,\ if\ I(p_i, r_j) = 1;\ x_i = 1\text{-}\theta_i\ if\ H(p_i, r_j) = 1\}$$

and

$$\square r_i = \{p_i \mid I(p_i, r_j) = 1\ or\ H(p_i, r_j) = 1,\ p_i \in P\}$$

3) All the enabled rules can fire at the same time. A firing vector μ is introduced such that $\mu_j = 1$, if r_j fires. After firing a set of rules, the marking and truth degree vectors of the FRPN become

$$\gamma' = \gamma \oplus [O \otimes \mu] \tag{1}$$

$$\theta' = \theta \oplus [(O \cdot C) \otimes \rho] \tag{2}$$

where

$\rho = (\rho_1, \rho_2, \cdots \rho_m)^T$, which is called control vector. $\mu : T \to \{0,1\}$ is the firing vector. $\mu = (\mu_1, \mu_2, \cdots \mu_m)^T$.

A 14-bus power system as shown in Figure A2.8 is used for the study of fault section estimation problem. The system consists of 34 sections, including 14 buses and 20 transmission lines. The buses are denoted as Bnn. The transmission lines are denoted as Lnnmm. The protection system of the 14-bus system consists of 174 protection devices, including 40 circuit breakers, 40 main transmission line relays, 40 primary backup transmission line relays and 40 secondary backup transmission line relays and 14 bus relays.

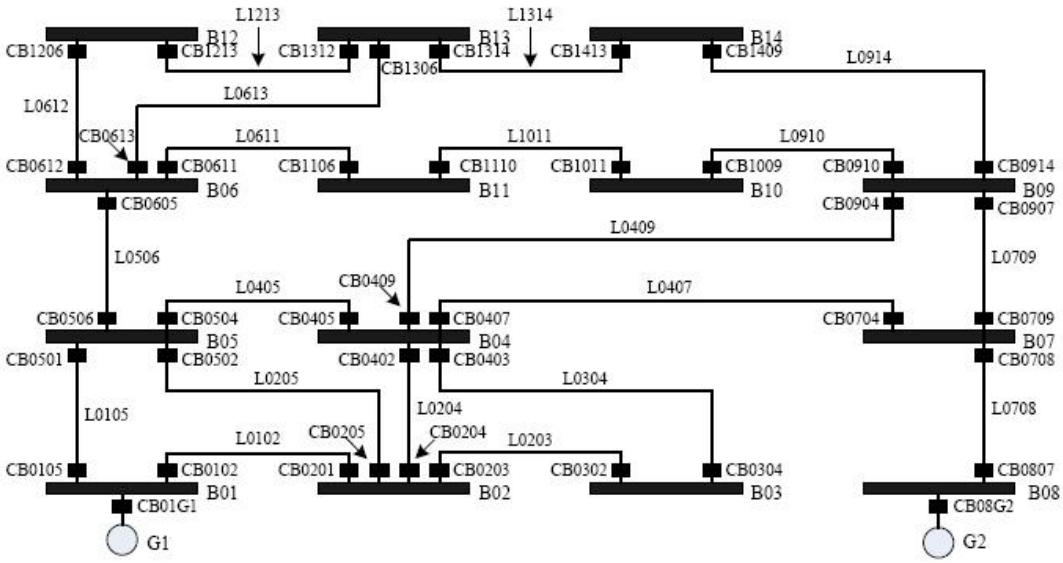

Figure A2.8 A 14-bus power system model

Based on the proposed structure, all the FRPN diagnosis models are developed. As examples, Figure A2.9 shows the FRPN models for the transmission line L1314 and bus B13 in Figure A2.8 respectively.

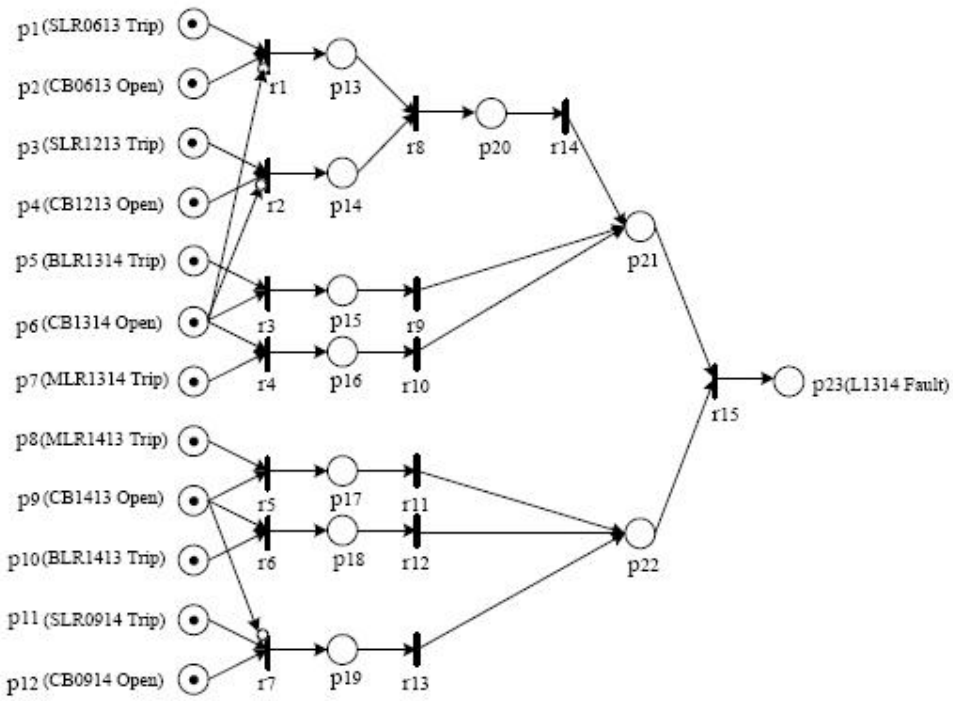

Figure A2.9 A FRPN model for L1314 fault based on SCADA data

C. Extensive of alarms for economic use

The model is based on a rational expectation. Under the assumption that market participants are risk-neutral, the forward price is equal to the corresponding expected spot price.

$$RT_s = E_{s-1}[RT_s] + \varepsilon_s$$

Where RT_s denotes the electricity spot price for delivery during hour s, $E_{s-1}[RT_s]$ denotes the expected value of RT_s that is formed at time s-1, and ε_s is the white noise.

Under normal conditions, market participants will bid based on the predicted Locational Marginal Price (LMP) or nodal price. The traditional way to calculate the LMPs is to use the distribution factor:

$$H = diag(b)A^T B_R^{-1}$$

Where A is the reduced incidence matrix, $B_R = A \cdot diag(b) \cdot A^T$ is the reduced susceptance matrix.

The power flow is

$$F = diag(b)A^T B_R^{-1} P$$

where P is the vector of injected power.

Therefore, by security constrained economic dispatch (SCED) method we can get the LMP of each bus.

$$\begin{bmatrix} \lambda_2 \\ \lambda_3 \\ \vdots \end{bmatrix} = H^T \mu + \begin{bmatrix} 1 \\ 1 \\ \vdots \end{bmatrix} \lambda_1$$

Where λ_1 is the LMP of the slack bus, $\lambda_2, \lambda_3, \cdots$ are the LMPs of all the other buses, H is the distribution factor matrix, and u is the shadow price of each transmission line.

All the above assumptions are based on the system normal operation condition. However, if one or several contingencies happen, it would have huge benefits for market participants to get the first hand information about what is going on.

When the alarms pop up in the control center, the alarm processor will quickly determine whether there is a fault or not, the type of the fault, and the cause-effect relationship.

Assuming that the system is working and the operator is able to maintain the power flow balance,we could than build an economic alarm processor to predict the LMPs under this possible contingency conditions

$$a_{new} = \varepsilon a = \begin{bmatrix} \varepsilon_1 & & \\ & \varepsilon_2 & \\ & & \ddots \end{bmatrix} \begin{bmatrix} a_{11} & a_{12} & \\ a_{21} & a_{22} & \\ & & \ddots \end{bmatrix}$$

$\varepsilon = 1$ denotes the branch i is still working properly.

$\varepsilon = 0$ denotes the branch i out.

And

$$P_{new} = \delta P = \begin{bmatrix} \delta_1 & & \\ & \delta_2 & \\ & & \ddots \end{bmatrix} \begin{bmatrix} P_1 \\ P_2 \\ \vdots \end{bmatrix}$$

$\delta = 1$ denotes the generator/load i is still working properly.

$\delta = 0$ denotes the generator/load i is out.

Thus, we can get

$$H_{new} = diag(b) A_{new}^T B_{R_new}^{-1}$$

and a possible set of the new LMPs with the probabilities of occurrence that could be delivered to all the market participants at once.

$$\begin{bmatrix} \lambda_{2_new} \\ \lambda_{3_new} \\ \vdots \end{bmatrix} = H_{new}^T \mu_{new} + \begin{bmatrix} 1 \\ 1 \\ \vdots \end{bmatrix} \lambda_1$$